PRELIMINARY & FINAL SITE PLAN

PROPOSED SELF-STORAGE FACILITY

100 N.J.S.H. ROUTE 17 NORTH

BOROUGH OF UPPER SADDLE RIVER, BERGEN COUNTY, NEW JERSEY

BLOCK: 1304; LOT: 7.01; TAX MAP: 13

ZONE: H-1R (HIGHWAY RETAIL & COMMERCIAL DISTRICT)
& R-1 (RESIDENCE DISTRICT)

SITE

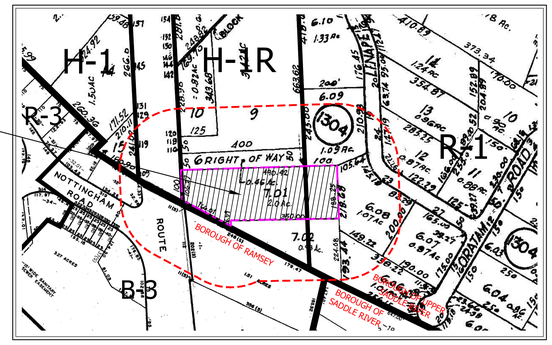

SURROUNDING ZONES	
BOROUGH OF UPPER SADDLE RIVER	
H-1R	HIGHWAY RETAIL & COMMERCIAL DISTRICT
R-1	RESIDENCE DISTRICT
H-1	HIGHWAY COMMERCIAL DISTRICT
BOROUGH OF RAMSEY	
R-3	RESIDENCE DISTRICT
B-3	HIGHWAY COMMERCIAL DISTRICT

TAX & ZONING MAP

GRAPHIC SCALE

200 0 100 200 400 800

1" = ±200'-0"

UNDER AUTHORITY OF REVISED STATE STATUTE 40:27-1, ET SEQ., THE DEPARTMENT OF PLANNING AND ECONOMIC DEVELOPMENT, DIVISION OF DEVELOPMENT REVIEW, ON BEHALF OF THE COUNTY PLANNING BOARD, COUNTY OF BERGEN, HAS REVIEWED THIS APPLICATION AND HAS DETERMINED THAT IT IS NOT SUBJECT TO COUNTY PLANNING BOARD APPROVAL.

ATTESTED TO BY: _____DATE:_____

PLANNING BOARD APPROVAL

APPROVED BY THE PLANNING BOARD OF THE BOROUGH OF UPPER SADDLE RIVER, COUNTY OF BERGEN, STATE OF NEW JERSEY
ON _____ BY RESOLUTION # _____

CHAIRMAN DATE

SECRETARY OF PLANNING BOARD DATE

BOROUGH ENGINEER DATE

PROPERTY OWNERS WITHIN 200 FEET OF SUBJECT PROPERTY:

BOROUGH OF UPPER SADDLE RIVER:

Block: 1304 Lot: 6.06
Shuster, Daniel & Robin
19 Oratam Rd
Upper Saddle River, NJ 07458

Block: 1304 Lot: 6.07
Gneco, Paul & Gina
15 Oratam Rd
Upper Saddle River, NJ 07458

Block: 1304 Lot: 6.08
Cha, Sun H & Min Youl
23 Lenape Trail
Saddle River, NJ 07458

Block: 1304 Lot: 6.09
Marron & Company, LLC
118 Rt. 17
Upper Saddle River, NJ 07458

Block: 1304 Lot: 6.10
Marron & Company, LLC
118 Rt. 17
Upper Saddle River, NJ 07458

Block: 1304 Lot: 7.01
Krisujen Realty LP
985 Route 17 South
Ramsey, NJ 07446

Block: 1304 Lot: 9
Marron & Company, LLC
118 Rt. 17
Upper Saddle River, NJ 07458

Block: 1304 Lot: 10
142 Route 17 LLC C/O ADPP
ENT Inc
200 Rt. 17 S Suite 215
Mahwah, NJ 07430

State of New Jersey
Dept. of Trans.
1035 Parkway Ave., CN600
Trenton, NJ 08625

PUBLIC UTILITIES:

Public Service Electric & Gas Co.
Manager - Corporate Properties
80 Park Plaza T6B
Newark, New Jersey 07102

United Water Company
200 Old Hook Road
Harrington Park, NJ 07640

Optimum
Public Relations Dept
40 Potash Road
Oakland, NJ 07436

Ramsey Water Dept.
Borough of Ramsey
33 N. Central Avenue
Ramsey, NJ 07446

Verizon
Engineering Mgr. Frank Scuzo
114 Paterson St.
Paterson, NJ 07501

BOROUGH OF RAMSEY:

Block: 5504 Lot: 1
BRE/ERA % Prop TX 2516
Suite 100
11525 N Community House
Charlotte, NC 28277

Block: 5501 Lot: 32
Lima Enterprises LLC
119 State Highway 17
Upper Saddle River, NJ 07458

Block: 5503 Lot: 41
NJ Energy Realty LLC
536 Main Street
New Paltz, NY 12561

PUBLIC UTILITIES:

Board of Public Works
33 North Central Avenue
Ramsey, New Jersey 07446

Public Service Electric and Gas
20 Van Vooreen Drive
Oakland, New Jersey 07436

Rockland Electric Company
1 Blue Hill Plaza
Pearl River, New York 10965

Cablevision of New Jersey
40 Potash Road
Oakland, New Jersey 07436

Verizon New Jersey
Real Estate Department
180 Washington Valley Road
Bedminster, NJ 07921

Bergen County Planning Board
1 Bergen County Plaza
Hackensack, NJ 07601

State of NJ Dept. of Transportation
PO Box 600
Trenton, NJ 08625-0600

BOROUGH OF SADDLE RIVER:

Block: 1309 Lot: 19
Zampieri, Patricia
69 W. Wildwood Rd.
Saddle River, NJ 07458

PUBLIC UTILITIES:

Planning Development (Dept. of Human Services)
1 Bergen County Plaza, 4th Fl.
Hackensack, NJ 07626

Cable Vision
40 Potash Road
Oakland, NJ 07436

PSE&G (Corporate Properties)
29 Van Vooreen Drive
Oakland, NJ 07438

Verizon
OPE-Right of Way Agent
114 Paterson St, 3rd Floor
Paterson, NJ 07501

Rockland Electric Co.
1 Blue Hill Plaza
Pearl River, NY 10965

DIG SAFELY NEW JERSEY
1-800-272-1000 (or) 811

BEFORE YOU DIG ANYWHERE IN NEW JERSEY!
CALL 1-800-272-1000 (or) 811
THE STATE OF NEW JERSEY REQUIRES THREE (3) DAYS NOTICE TO UTILITIES BEFORE YOU EXCAVATE, DRILL, BLAST OR DEMOLISH.

DRAWING No.:	DRAWING TITLE:
C-01	COVER SHEET
C-02	EXISTING CONDITIONS & DEMOLITION PLAN
C-02A	AERIAL PHOTOGRAPH
C-03	SITE PLAN
C-04	GRADING, DRAINAGE & UTILITY PLAN
C-05	LANDSCAPING PLAN
C-06	LIGHTING PLAN
C-07	SOIL EROSION & SEDIMENT CONTROL PLAN
C-08	TRUCK TURNING & SNOW STORAGE PLAN
C-09	DETAILS - 1
C-10	DETAILS - 2
C-11	DETAILS - 3
C-12	DETAILS - 4
C-13	DETAILS - 5

L2A LAND DESIGN / LLC
60 GRAND AVENUE
ENGLEWOOD, NJ 07631
201.227.0300 • 201.227.0001 (Fax)
www.L2Alanddesign.com
New Jersey Certificate of Authorization No. 24GA28130600

10/1/2020
Michael E. Dipple, P.E. Date
New Jersey Professional Engineer #24GE04081200

WARNING: IF THIS PLAN DOES NOT CONTAIN A RAISED IMPRESSION SEAL OVER THE PROFESSIONAL SIGNATURE IT IS NOT AN AUTHORIZED OFFICIAL COPY

APPLICANT:
PSI ATLANTIC USR NJ, LLC
530 OAK COURT DRIVE, SUITE 185
MEMPHIS, TN 38117
901.290.0184 (PHONE)

OWNER:
KRISUJEN REALTY, L.P.
A NEW JERSEY LIMITED PARTNERSHIP
7 INDUSTRIAL AVENUE
MAHWAH, NJ 07430
201.525.6292 (PHONE)

ARCHITECT:
PARKER STUDIOS
1300 MINT STREET, SUITE 110
CHARLOTTE, NC 28203
980.819.0416 (PHONE)

SURVEYOR:
LAKELAND SURVEYING, INC.
4 WEST MAIN STREET
ROCKAWAY, NJ 07866
973.625.5670 (PHONE)
973.625.4121 (FAX)

NO.	REVISION	DATE
1	REVISED PER COMPLETENESS REVIEW	5/17/2020
2	REVISED DRAINAGE PER NJDOT COMMENTS, DATED 7/21/2020	8/17/2020
3	REVISED PER PLANNING BOARD RESUBMISSION	10/1/2020

Previous Editions Obsolete

PROJECT LOCATION:
PROPOSED SELF-STORAGE FACILITY
100 N.J.S.H. ROUTE 17 NORTH
BOROUGH OF UPPER SADDLE RIVER,
BERGEN COUNTY, NJ

BLOCK: 1304; LOT: 7.01
TAX MAP: 13

DRAWING TITLE:
COVER SHEET

SCALE:	REFER TO PLAN
DATE	1/17/2020
DESIGNED:	TEC
APPROVED:	MED
L2A PROJ. No.:	1901.161
DRAWING No.:	C-01

L2A LAND DESIGN, LLC – ALL RIGHTS RESERVED
THE COPY OR REUSE OF THIS DOCUMENT, OR PORTIONS THEREOF, FOR USE OTHER THAN THE PURPOSE ORIGINALLY INTENDED, WITHOUT THE WRITTEN PERMISSION OF L2A LAND DESIGN, LLC IS PROHIBITED.

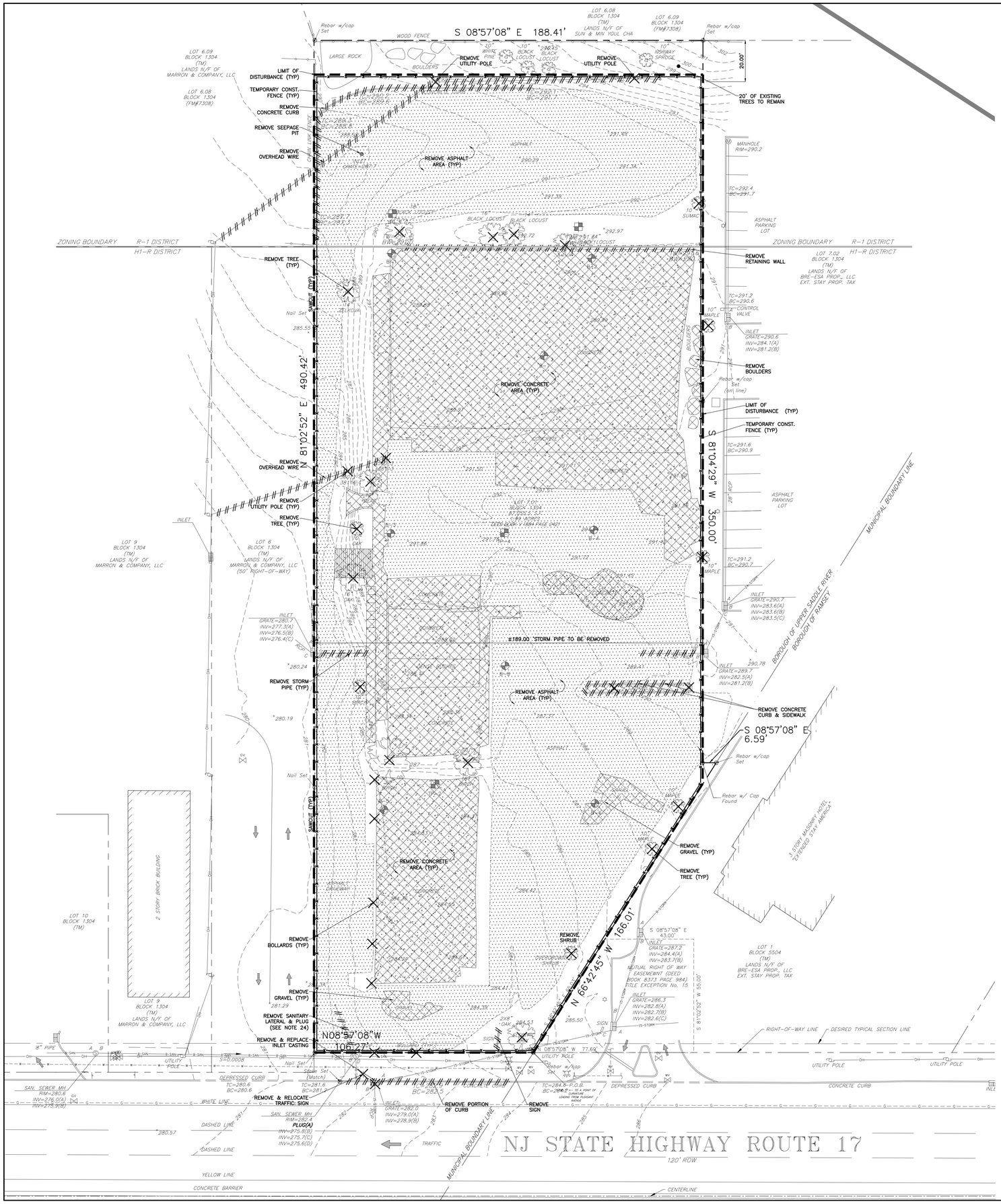

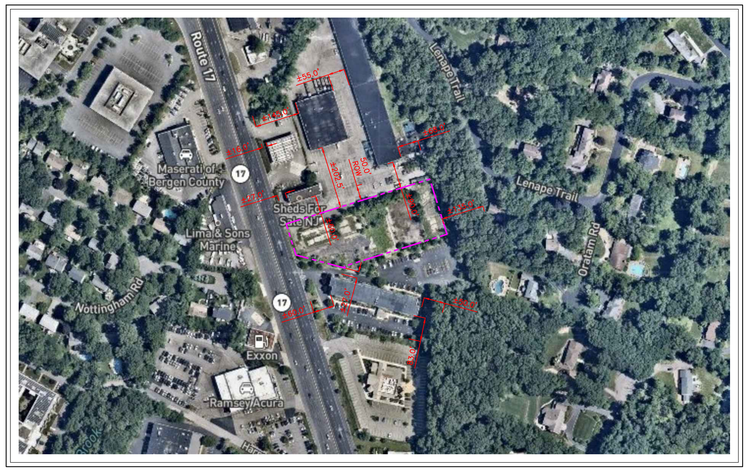

KEY MAP

GRAPHIC SCALE

200 0 100 200 400 800

1" = ±200'-0"

DEMOLITION AND REMOVAL NOTES

1. THIS PROJECT REFERENCES A SURVEY PREPARED BY:
   LAKELAND SURVEYING
   4 WEST MAIN STREET, ROCKAWAY, NJ 07866
   973.625.5670 (OFFICE) - 973.625.4121 (FAX)
   PROJECT NUMBER: 142148 - DATED: 11/7/2019
2. ALL DEMOLITION ACTIVITIES ARE TO BE PERFORMED IN STRICT ADHERENCE TO ALL FEDERAL, STATE, AND LOCAL REGULATIONS.
3. IN ADVANCE OF DEMOLITION/REMOVAL WORK, ARRANGE FOR DISCONNECTION OR REROUTING OF UTILITY LINE(S). IDENTIFY SUCH CAPPED, PLUGGED, SEALED, OR REROUTED LINES ON A RECORD DRAWING.
4. BEFORE COMMENCEMENT OF DEMOLITION, REMOVE ALL GLASS IN WINDOWS, DOORS, SKYLIGHTS, AND FIXTURES.
5. PROCEED WITH DEMOLITION/REMOVAL IN A SYSTEMATIC MANNER, FROM TOP OF STRUCTURE TO GROUND, COMPLETE UPPER DEMOLITION/REMOVAL BEFORE DISTURBING LOWER SUPPORTING MEMBERS.
6. DEMOLISH CONCRETE AND MASONRY IN SMALL SECTIONS. LOWER HEAVY FRAMING MEMBERS CAREFULLY.
7. BREAK AND REMOVE ON GRADE AND BASEMENT SLABS UNLESS OTHERWISE INDICATED ON THE CONTRACT DRAWINGS.
8. WHEREVER ASPHALT OR CONCRETE PAVEMENT IS REMOVED, THE CONTRACTOR SHALL SAW-CUT AND NEATLY TRIM THE EDGE OF REMAINING PAVEMENTS BEFORE INSTALLING NEW CONSTRUCTION. ASPHALT PAVEMENT SHALL BE REMOVED TO THE SUBGRADE.
9. WHERE REMOVAL OF CONCRETE CURB IS SHOWN ON THE CONTRACT DRAWINGS, THE REMOVAL LIMITS SHALL BE TO THE NEAREST CURB JOINTS.
10. DEMOLITION USING EXPLOSIVE, INCENDIARY, OR WRECKING BALL METHODS IS PROHIBITED.
11. CONDUCT DEMOLITION/REMOVAL OPERATIONS AND DISPOSAL OF DEBRIS TO ENSURE MINIMUM INTERFERENCE WITH THE USE OF, OR ACCESS TO, ADJACENT BUILDINGS OR CONSTRUCTION SITE AREA. DO NOT UNNECESSARILY OBSTRUCT SIDEWALKS OR STREETS.
12. PROVIDE TEMPORARY INTERIOR SHORING, BRACING AND/OR SUPPORT AS REQUIRED ENSURING THAT MOVEMENT OR SETTLEMENT OF STRUCTURES TO BE DEMOLISHED IS SAFELY CONTROLLED AND COLLAPSE IS PREVENTED.
13. USE WATER SPRINKLING, ENCLOSED CHUTES, AND/OR TEMPORARY ENCLOSURES TO LIMIT DUST AND DIRT RISING AND SCATTERING IN THE AIR. PROVIDE A WATER TRUCK, WATER LINE, AND HOSES FOR THIS PURPOSE. DO NOT USE WATER WHEN IT MAY CREATE HAZARDOUS OR OBJECTIONABLE CONDITIONS SUCH AS ICING OR FLOODING.
14. DO NOT DISTURB SERVICE TO OFF-SITE FIRE HYDRANTS IN ANY WAY WITHOUT WRITTEN APPROVAL OF THE ENGINEER. IF, WITH WRITTEN APPROVAL OF THE ENGINEER, WATER SERVICE TO ANY AREA IS DISRUPTED, MAKE PROVISIONS TO ENSURE ADEQUATE FIRE PROTECTION FOR SUCH AREA.
15. AT ALL TIMES, MAINTAIN ACCESSIBILITY FROM THE STREET TO ALL FIRE HYDRANTS, TRAFFIC SIGNALS, POWER OR LIGHT POLES, MAILBOXES, AND SIMILAR UTILITY AND PUBLIC SERVICE ITEMS ADJACENT TO THE CONSTRUCTION SITE.
16. DO NOT INTERRUPT UTILITIES SERVING OCCUPIED OR USED AREAS, EXCEPT WHEN AUTHORIZED BY THE ENGINEER. PROVIDE TEMPORARY SERVICES DURING SUCH INTERRUPTIONS AS APPROVED BY THE ENGINEER.
17. DO NOT STORE ANY MATERIALS, RUBBISH, DIRT, DEBRIS, OR WASTE OF ANY SORT RESULTING FROM THE DEMOLITION OPERATIONS ON THE FLOOR OF PARTIALLY DEMOLISHED STRUCTURES OR ADJACENT CONSTRUCTION SITE AREAS.
18. DISPOSE DEBRIS, RUBBISH, AND OTHER MATERIALS RESULTING FROM DEMOLITION OPERATIONS AWAY FROM THE CONSTRUCTION SITE.
19. DO NOT BURN, BURY, OR OTHERWISE DISPOSE OF DEBRIS, RUBBISH, OR OTHER MATERIALS RESULTING FROM DEMOLITION OPERATIONS.
20. STORAGE OR SALE OF ITEMS OF SALVABLE VALUE TO THE CONTRACTOR IS PROHIBITED AT THE CONSTRUCTION SITE.
21. WHERE THE CONTRACT DRAWINGS INDICATE THE ABANDONMENT OF AN EXISTING PIPE, PLUG BOTH ENDS OF THE PIPE WITH CONCRETE. THE CONCRETE SHALL HAVE A 28 DAY COMPRESSIVE STRENGTH OF 3,500 PSI. EACH PLUG SHALL COVER THE FULL CROSS SECTIONAL AREA OF THE PIPE AND ITS THICKNESS SHALL BE ONE-THIRD (1/3) OF THE NOMINAL DIAMETER OF THE PIPE BUT NOT LESS THAN EIGHT (8") INCHES.
22. WHERE A PIPE IS TO BE REMOVED FROM AN EXISTING STRUCTURE, THE REMAINING OPENING IN THE STRUCTURE SHALL BE FILLED WITH CONCRETE. THE CONCRETE SHALL HAVE A 28 DAY COMPRESSIVE STRENGTH OF 3,500 PSI. THE CONCRETE THICKNESS SHALL NOT BE LESS THAN EIGHT (8") INCHES.
23. WHERE THE CONTRACT DRAWINGS INDICATE THE ABANDONMENT OF A MANHOLE OR CATCH BASIN THE CONTRACTOR SHALL:
    A. REMOVE THE FRAME AND GRATE OR CASTING.
    B. REMOVE THE STRUCTURE TO THREE (3'-0") FEET BELOW THE FINISHED GRADE.
    C. PLUG PIPES IN ACCORDANCE WITH NOTES 20 & 21.
    D. PUNCH HOLES IN THE BOTTOM OF THE STRUCTURE.
    E. FILL THE STRUCTURE WITH I-12 SAND TO FINISHED GRADE IN UNPAVED AREAS OR TO THE BOTTOM OF THE PAVEMENT SECTION IN PAVED AREAS.
23. ALL TREES ON SITE TO BE REMOVED UNLESS OTHERWISE NOTED.
24. PRIOR TO DEMOLITION (REMOVAL AND/OR CAPPING) OF EXISTING SANITARY FEATURES AND/OR LATERALS, CONTRACTOR SHALL CONFIRM THAT EXISTING SANITARY LATERAL DOES NOT ACTIVELY SERVICE LANDS N/F OF MARRON & COMPANY, LLC. (IN REFERENCE TO EASEMENT MODIFICATION AS SET FORTH IN INDENTURE BETWEEN MARRON & COMPANY AND ATRIMEC REALTY CORP., DATED AUGUST 8, 1988 AND RECORDED JANUARY 9, 1989 IN DEED BOOK 7260 PAGE 802.)

LIMIT OF DISTURBANCE = 83,700 SF (1.92 Acres)

TREES TO BE REMOVED:

TYPE OF TREE	SIZE [1]	QUANTITY
BIRCH	10"	1
BIRCH	16"	1
BIRCH	20"	1
BLACK LOCUS	14"	2
BLACK LOCUS	16"	1
BLACK LOCUS	18"	1
DEAD	12"	1
MAPLE	10"	4
OAK	8"	2
OAK	10"	1
OAK	16"	1
SUMAC	10"	1
ZELKOVA	14"	1
TOTAL		18

1. TREES TO BE REMOVED THAT ARE 12" DIAMETER OR GREATER REQUIRE A TREE REMOVAL PERMIT. (TOTAL OF 9 TREES)

VERTICAL DATUM = NAVD88

LEGEND

	REMOVE ASPHALT AREAS
	REMOVE CONCRETE/GRAVEL/ROCK AREAS
X	REMOVE INDIVIDUAL ITEM
// // // // //	REMOVE/DEMOLISH LINEAR ITEM
— — — —	SAWCUT LINE
—X—	TEMPORARY CONSTRUCTION FENCE
— —	LIMIT OF DISTURBANCE
B-1	NUMBER & APPROXIMATE LOCATION OF GEOTECH. BORING (PER JOHNSON SOILS COMPANY)
TP-1	NUMBER & APPROXIMATE LOCATION OF SOIL TEST PITS (PER L2A LAND DESIGN, LLC)

GRAPHIC SCALE

20 0 10 20 40 80

(IN FEET)
1" = 20'-0"

L2A LAND DESIGN, LLC
60 GRAND AVENUE
ENGLEWOOD, NJ 07631
201.227.0300 • 201.227.0001 (Fax)
www.L2Alanddesign.com
New Jersey Certificate of Authorization No. 24GA28139000

10/1/2020
Michael E. Dipple, P.E. Date
New Jersey Professional Engineer #24GE04081200

WARNING: IF THIS PLAN DOES NOT CONTAIN A RAISED IMPRESSION SEAL OVER THE PROFESSIONAL SIGNATURE IT IS NOT AN AUTHORIZED OFFICIAL COPY

APPLICANT:
PSI ATLANTIC USR NJ, LLC
530 OAK COURT DRIVE, SUITE 185
MEMPHIS, TN 38117
901.290.0184 (PHONE)

OWNER:
KRISUDEN REALTY, L.P.
A NEW JERSEY LIMITED PARTNERSHIP
7 INDUSTRIAL AVENUE
MAHWAH, NJ 07430
201.525.6292 (PHONE)

ARCHITECT:
PARKER STUDIOS
1300 MINT STREET, SUITE 110
CHARLOTTE, NC 28203
980.819.0416 (PHONE)

SURVEYOR:
LAKELAND SURVEYING, INC.
4 WEST MAIN STREET
ROCKAWAY, NJ 07866
973.625.5670 (PHONE)
973.625.4121 (FAX)

NO.	REVISION	DATE
1	REVISED PER COMPLETENESS REVIEW	5/17/2020
2	REVISED DRAINAGE PER NJDOT COMMENTS, DATED 7/21/2020	8/17/2020
3	REVISED PER PLANNING BOARD RESUBMISSION	10/1/2020

Previous Editions Obsolete

PROJECT LOCATION:
PROPOSED SELF-STORAGE FACILITY
100 N.J.S.H. ROUTE 17 NORTH
BOROUGH OF UPPER SADDLE RIVER,
BERGEN COUNTY, NJ

BLOCK: 1304; LOT: 7.01
TAX MAP: 13

DRAWING TITLE:
EXISTING CONDITIONS & DEMOLITION PLAN

SCALE:	REFER TO PLAN
DATE	1/17/2020
DESIGNED:	TEC
APPROVED:	MED
L2A PROJ. No.:	1901.161
DRAWING No.:	C-02

L2A LAND DESIGN, LLC — ALL RIGHTS RESERVED
THE COPY OR REUSE OF THIS DOCUMENT, OR PORTIONS THEREOF, FOR USE OTHER THAN THE PURPOSE ORIGINALLY INTENDED, WITHOUT THE WRITTEN PERMISSION OF L2A LAND DESIGN, LLC IS PROHIBITED.

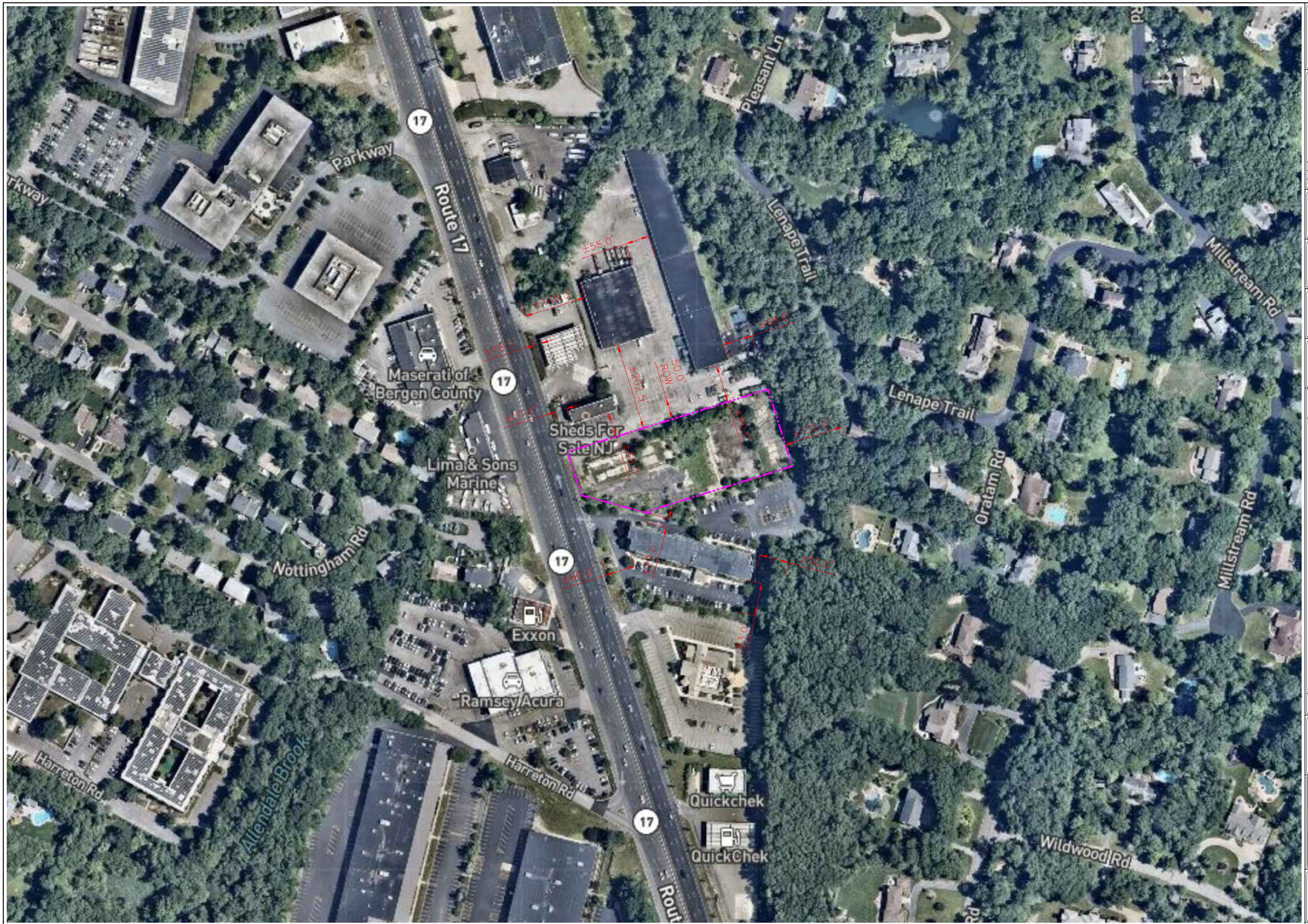

GRAPHIC SCALE

80 0 40 80 160 320

(IN FEET)
1" = 80'-0"

L2A LAND DESIGN, LLC
60 GRAND AVENUE
ENGLEWOOD, NJ 07631
201.227.0300 • 201.227.0001 (Fax)
www.L2Alanddesign.com
New Jersey Certificate of Authorization No. 24GA28130900

10/1/2020

Michael E. Dipple, P.E. Date

New Jersey Professional Engineer #24GE04081200

WARNING: IF THIS PLAN DOES NOT CONTAIN A RAISED IMPRESSION SEAL OVER THE PROFESSIONAL SIGNATURE IT IS NOT AN AUTHORIZED OFFICIAL COPY

APPLICANT:
PSI ATLANTIC USR NJ, LLC
530 OAK COURT DRIVE, SUITE 185
MEMPHIS, TN 38117
901.290.0184 (PHONE)

OWNER:
KRISUDEN REALTY, L.P.
A NEW JERSEY LIMITED PARTNERSHIP
7 INDUSTRIAL AVENUE
MAHWAH, NJ 07430
201.525.6292 (PHONE)

ARCHITECT:
PARKER STUDIOS
1300 MINT STREET, SUITE 110
CHARLOTTE, NC 28203
980.819.0416 (PHONE)

SURVEYOR:
LAKELAND SURVEYING, INC.
4 WEST MAIN STREET
ROCKAWAY, NJ 07866
973.625.5670 (PHONE)
973.625.4121 (FAX)

NO.	REVISION	DATE
1	REVISED PER COMPLETENESS REVIEW	5/17/2020
2	REVISED DRAINAGE PER NJDOT COMMENTS, DATED 7/21/2020	8/17/2020
3	REVISED PER PLANNING BOARD RESUBMISSION	10/1/2020

Previous Editions Obsolete

PROJECT LOCATION:
PROPOSED SELF-STORAGE FACILITY
100 N.J.S.H. ROUTE 17 NORTH
BOROUGH OF UPPER SADDLE RIVER,
BERGEN COUNTY, NJ

BLOCK: 1304; LOT: 7.01
TAX MAP: 13

DRAWING TITLE:
AERIAL PHOTOGRAPH

SCALE:	REFER TO PLAN
DATE	1/17/2020
DESIGNED:	TEC
APPROVED:	MED
L2A PROJ. No.:	1901.161
DRAWING No.:	C-02A

L2A LAND DESIGN, LLC – ALL RIGHTS RESERVED
THE COPY OR REUSE OF THIS DOCUMENT, OR PORTIONS THEREOF, FOR USE OTHER THAN THE PURPOSE ORIGINALLY INTENDED, WITHOUT THE WRITTEN PERMISSION OF L2A LAND DESIGN, LLC IS PROHIBITED.

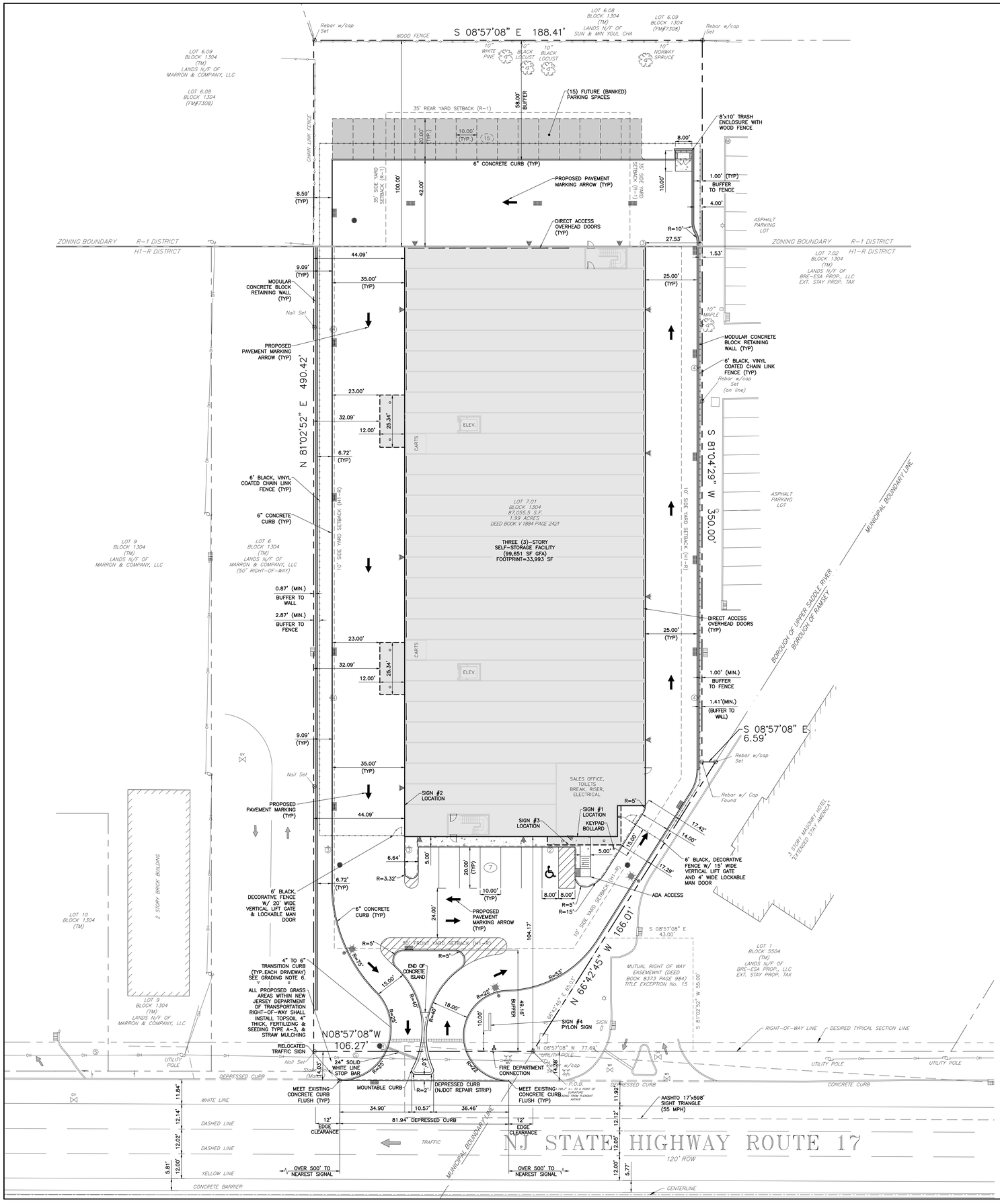

PROJECT NOTES:

1. THIS PROJECT REFERENCES SURVEYS PREPARED BY:
   LAKELAND SURVEYING, 4 WEST MAIN STREET, ROCKAWAY, NJ 07866
   973.625.5670 (OFFICE) - 973.625.4121 (FAX)
   PROJECT NUMBER: 142148 - DATED: 11/7/19
2. PROPERTY LOCATION: BLOCK 1304, LOT 7.01
3. PROPERTY ADDRESS: 100 N.J.S.H. ROUTE 17 NORTH, UPPER SADDLE RIVER, NJ 07458
4. ZONES: H-1R (HIGHWAY RETAIL & COMMERCIAL DISTRICT) & R-1 (RESIDENCE DISTRICT)
5. EXISTING USE: VACANT
6. PROPOSED USE: SELF-STORAGE FACILITY **(VARIANCE)**
7. PER §150-10.A: COMMERCIAL PARKING LOT IN AN R-1 ZONE (**VARIANCE**)
8. LOT AREA: 87,055.5 SQ. FT. (±1.99 AC.)

BULK REGULATIONS	H-1R (HIGHWAY RETAIL & COMMERCIAL DISTRICT)	R-1 (RESIDENCE DISTRICT)	PROPOSED	VARIANCE (H-1R)	VARIANCE (R-1)
MINIMUM LOT AREA (SF)	22,500 SF	37,500 SF	87,055.5 SF	NO	NO
MINIMUM LOT FRONTAGE (Ft.)	150 Ft.	150 Ft.	106.27 Ft.	EN	EN
MINIMUM LOT DEPTH (Ft.)	150 Ft.	150 Ft.	490.42 Ft.	NO	NO
MINIMUM FRONT YARD SETBACK (Ft.)	50 Ft.	50 Ft.	104.17 Ft.	NO	N/A
MINIMUM SIDE YARD SETBACK (Ft.)	10 Ft.	35 Ft.	17.29 Ft.	NO	N/A
MINIMUM REAR YARD SETBACK (Ft.)	N/A	35 Ft.	100.00 Ft.	N/A	NO
MINIMUM COMBINED SIDE YARD SETBACK (Ft.)	30 Ft.	N/A	49.38 Ft.	NO	N/A
MINIMUM SIDE OR REAR ABUTTING RESIDENTIAL (Ft.)	35 Ft.	N/A	100.00 Ft.	NO	N/A
MINIMUM SIDE OR REAR YARD BUFFER (Ft.)	5 Ft.	N/A	0.87 Ft.	**YES** [6]	N/A
MINIMUM FRONT BUFFER (Ft.)	10 Ft.	N/A	49.16 Ft.	NO	N/A
MAXIMUM BUILDING HEIGHT (STORIES/Ft.)	3 Stories/36 Ft.	2.5 Stories/35 Ft.	3.0 Stories/39.25 Ft.[2]	**YES**	N/A
MAXIMUM BUILDING COVERAGE (%) [3]	40% (34,749 SF)	15%	39.05% (33,993 SF)	NO	N/A
MAXIMUM IMPROVEMENT COVERAGE (%)	N/A	30%	55.53%[4]	N/A	**YES**

1. EN = EXISTING NON-CONFORMITY, N/A = NOT APPLICABLE
2. PER §150-3: BUILDING HEIGHT CALCULATED FROM LOWEST NATURAL GRADE AT NORTHWEST CORNER OF BUILDING.
   CALC: EL. 288.75 (PROPOSED GRADE) + 35.00 = EL. 323.75 RIDGE HEIGHT,
   CALC: EL. 323.75 (RIDGE HEIGHT) - 284.50 (EXISTING GRADE) = 39.25 Ft.
3. CALCULATED AS (PORTION OF BUILDING) / (PORTION OF LOT) WITHIN RESPECTIVE ZONES:
   - BUILDING AREA WITHIN H1-R ZONE (33,993 SF) / PROPERTY AREA WITHIN H1-R ZONE (68,216.81 SF) = 49.83%
   - BUILDING AREA WITHIN R-1 ZONE (0 SF) / PROPERTY AREA WITHIN R-1 ZONE (18,838.65 SF) = N/A
4. CALCULATED AS (PORTION OF IMPROVEMENT COVERAGE) / (PORTION OF LOT) WITHIN RESPECTIVE ZONES:
   - IMPROVEMENT AREA WITHIN R-1 ZONE (10,461 SF) / PROPERTY AREA WITHIN R-1 ZONE (18,838.65 SF) = 55.53%
5. PER §150-3: PROPOSED RETAINING WALL IS OVER 3.0 FT IN HEIGHT AT THE LOWER GROUND LEVEL. **(WAIVER)**
6. PER §150-3: PROPOSED RETAINING WALL IS LOCATED WITHIN THE SIDE OR REAR YARD BUFFER. **(VARIANCE)**
7. PER §126-29C: NO TRAFFIC AISLE LOCATED WITHIN FIVE FEET OF ANY BUILDING. **(WAIVER)**
8. PER §126-27: ONE-WAY ACCESS OPENINGS SHALL NOT BE LESS THAN 17 FEET WIDE. **(WAIVER)**
9. PER §126-33: THE LIGHTING OF THE BUILDING, PROPERTY, & SIGNS SHALL NOT PRODUCE ANY GLARE AT THE EXTERIOR LOT LINES. **(WAIVER)**

PARKING & LOADING REQUIREMENTS:

LAND OR BUILDING USE	REQUIRED	PROPOSED	VARIANCE
OFF-STREET PARKING STANDARDS (PER §150-29) WAREHOUSE: 1 SPACE PER 1000 SF OF GFA DEVOTED TO WAREHOUSING OR 1 FOR EACH EMPLOYEE ON THE MAX SHIFT PLUS 20%	2 EMPLOYEES ON MAX SHIFT + (2 x 0.20) = 2.4 SPACES TOTAL REQUIRED PARKING = 3.0 SPACES	22 PARKING SPACES (INCLUDES 15 BANKED PARKING SPACES)	NO
OFF-STREET LOADING REQUIREMENTS (PER §126-34) WAREHOUSE: 1 SPACE FOR FIRST 5,000 SF OF FLOOR AREA + 1 SPACE PER ADDITIONAL 40,000 SF OF FLOOR AREA	0 SF - 5,000 SF = 1 LOADING SPACE 5,001 SF - 40,000 SF = 1 LOADING SPACE 40,001 SF - 80,000 SF = 1 LOADING SPACE TOTAL REQUIRED LOADING = 3.0 SPACES	0 LOADING SPACES	**WAIVER**

1. PER §150-29(C): PARKING SPACE SIZE = 200 SF (10' X 20'). IN A PARTICULAR CASE, IF AN APPLICANT FOR A SITE PLAN APPROVAL CAN DEMONSTRATE THAT STRICT ENFORCEMENT OF THE MINIMUM PARKING REQUIREMENTS OR THE MINIMUM PARKING STALL SIZES WILL CAUSE HARDSHIP AND THAT SUCH MINIMUMS ARE NOT REASONABLY REQUIRED FOR THE CONTEMPLATED USE, THE PLANNING BOARD MAY WAIVE THE STRICT ENFORCEMENT OF SUCH MINIMUMS, PROVIDED THAT THE PARKING STALL SIZE SHALL NOT BE LESS THAN 9' X 18'. **(COMPLIES)**
2. PER §150-29(B): PARKING SETBACK = 10' FROM A STREET LINE. **(COMPLIES)**
3. PER §125-28: NO LOADING PERMITTED IN A RESIDENTIAL DISTRICT. **(COMPLIES)**

PROPOSED SIGNAGE TABLE:

SIGN TYPE/ LOCATION	DESCRIPTION/ LOCATION	PERMITTED PER §150-21(B)	PROPOSED	VARIANCE
WALL SIGNS	ALL ALL WEST/FRONT ELEVATION NORTH ELEVATION	MAX. NUMBER OF SIGNS= 2 [1] MAX. COMBINED SIGN AREA= 90 SF [1] MAX. NUMBER OF SIGNS= 1 [1] MAX. NUMBER OF SIGNS= 1 [1]	PROP. NUMBER OF SIGNS= 2 PROP. COMBINED SIGN AREA= 85.20 SF PROP. NUMBER OF SIGNS= 1 PROP. NUMBER OF SIGNS= 1	NO NO NO NO
	"EXTRA SPACE STORAGE" 42.60 SF (24" x 21' -3 $\frac{3}{8}$") (WEST ELEVATION: SIGN #1)	MAX. SIGN AREA= 60 SF [2] MAX. SIGN FACE HEIGHT= 4' MAX. SIGN FACE WIDTH= 25' MAX. BUILDING PROJECTION= 1'	PROP. SIGN AREA= 42.60 SF PROP. SIGN FACE HEIGHT= 2.00' PROP. SIGN FACE WIDTH= 21.30' PROP. BUILDING PROJECTION= 1'	NO NO NO NO
	"EXTRA SPACE STORAGE" 42.60 SF (24" x 21'-3 $\frac{3}{8}$") (NORTH ELEVATION: SIGN #2)	MAX. SIGN AREA= 60 SF [2] MAX. SIGN FACE HEIGHT= 4' MAX. SIGN FACE WIDTH= 25' MAX. BUILDING PROJECTION= 1'	PROP. SIGN AREA= 42.60 SF PROP. SIGN FACE HEIGHT= 2.00' PROP. SIGN FACE WIDTH= 21.30' PROP. BUILDING PROJECTION= 1'	NO NO NO NO
DIRECTIONAL/ WAYFINDING	"OFFICE" 3.64 SF (14" x 4'-1 $\frac{3}{8}$") (WEST ELEVATION: SIGN #3)	MAX. SIGN AREA= 4 SF MAX. SIGN FACE HEIGHT= 3'	PROP. SIGN AREA= 3.64 SF PROP. SIGN FACE HEIGHT= 1.17'	NO NO
FREESTANDING SIGN	"EXTRA SPACE STORAGE" DOUBLE SIDED PYLON SIGN 35.94 SF (8'-11" x 4'-$\frac{3}{8}$") (FRONT YARD SETBACK: SIGN #4)	MAX. NUMBER OF SIGNS= 1 MAX. SIGN AREA= 36 SF MIN. BOTTOM SIGN HEIGHT= 10' MAX. TOP SIGN HEIGHT= 20' MAX. SIGN DIMENSIONS= 12'W/8'H/1.5'D MIN. FRONT YARD SETBACK= 35'	PROP. NUMBER OF SIGNS= 1 PROP. SIGN AREA= 35.94 SF PROP. BOTTOM SIGN HEIGHT= 15.97' PROP. TOP SIGN HEIGHT= 20' PROP. SIGN DIMENSIONS= 8.92'W/4.03'H/1.5'D PROP. FRONT YARD SETBACK= 10'	NO NO NO NO NO **YES**

1. A SECONDARY WALL SIGN MAY BE PERMITTED ON A SECOND WALL; SAID SECONDARY SIGN SHALL BE AN IDENTICAL FACSIMILE OF THE FIRST AND THE AGGREGATE AREA OF THE TWO SIGNS SHALL NOT EXCEED 90 SQUARE FEET.
2. A SIGN ATTACHED TO A WALL OF A BUILDING SHALL NOT EXCEED IN AREA 60 SF OR 5% OF THE AREA OF THE BUILDING WALL TO WHICH SAID SIGN IS ATTACHED, WHICHEVER IS LESS. A SECONDARY WALL SIGN MAY BE PERMITTED ON A SECOND WALL; SAID SECONDARY SIGN SHALL BE AN IDENTICAL FACSIMILE OF THE FIRST.
   CALC (WEST/FRONT ELEVATION): 5% X 3,613.75 SF = 180.69 SF > 60 SF (BUILDING WALL AREA IS GREATER, USE MAX. SIGN AREA= 60 SF)
   CALC (NORTH ELEVATION): 5% X 10,018.75 SF = 500.94 SF > 60 SF (BUILDING WALL AREA IS GREATER, USE MAX. SIGN AREA= 60 SF)

GENERAL NOTES:

1. PRIOR TO STARTING CONSTRUCTION, THE CONTRACTOR SHALL BE RESPONSIBLE TO MAKE SURE THAT ALL REQUIRED PERMITS AND APPROVALS HAVE BEEN OBTAINED. NO CONSTRUCTION OR FABRICATION SHALL BEGIN UNTIL THE CONTRACTOR HAS RECEIVED AND THOROUGHLY REVIEWED ALL PLANS AND OTHER DOCUMENTS BY ALL OF THE PERMITTING AUTHORITIES.
2. ALL WORK SHALL BE PERFORMED IN ACCORDANCE WITH THESE PLANS AND SPECIFICATIONS AND THE REQUIREMENTS AND STANDARDS OF THE LOCAL GOVERNING AUTHORITY.
3. THE PROPERTY SURVEY IS CONSIDERED A PART OF THESE PLANS.
4. ALL DIMENSIONS SHOWN ON THE PLANS SHALL BE FIELD VERIFIED BY THE CONTRACTOR PRIOR TO CONSTRUCTION. THE CONTRACTOR SHALL NOTIFY THE ENGINEER IF ANY DISCREPANCIES EXIST PRIOR TO PROCEEDING WITH CONSTRUCTION FOR NECESSARY PLAN CHANGES. NO EXTRA COMPENSATION SHALL BE PAID TO THE CONTRACTOR FOR WORK HAVING TO BE REDONE DUE TO DIMENSIONS OR GRADES SHOWN INCORRECTLY ON THESE PLANS IF SUCH NOTIFICATION HAS NOT BEEN GIVEN.
5. SOLID WASTE TO BE DISPOSED OF BY THE CONTRACTOR IN ACCORDANCE WITH ALL LOCAL, STATE AND FEDERAL REGULATIONS.
6. ALL EXCAVATED UNSUITABLE MATERIAL MUST BE TRANSPORTED TO AN APPROVED DISPOSAL LOCATION.
7. THE CONTRACTOR IS RESPONSIBLE FOR ALL SHORING REQUIRED DURING EXCAVATION AND SHALL BE PERFORMED IN ACCORDANCE WITH CURRENT OSHA STANDARDS, AS WELL AS ADDITIONAL PROVISIONS TO ASSURE STABILITY OF CONTIGUOUS STRUCTURES, AS FIELD CONDITIONS DICTATE.
8. THE PROPERTY CORNERS MUST BE STAKED PRIOR TO THE COMMENCEMENT OF CONSTRUCTION ACTIVITIES.
9. THE CONTRACTOR SHALL BE RESPONSIBLE FOR THE PROTECTION OF ALL ITEMS AND FEATURES WHICH ARE TO REMAIN WHETHER SHOWN ON THE DRAWINGS OR NOT.
10. THE CONTRACTOR SHALL PROVIDE ALL NECESSARY SAFEGUARDS INCLUDING THE INSTALLATION OF SHORING, STRUCTURAL SUPPORTS, PROTECTIVE FENCING AND BARRIERS, ETC., AS MAY BE REQUIRED TO PREVENT UNAUTHORIZED ENTRY INTO THE CONSTRUCTION SITE, DAMAGE TO ADJACENT PROPERTY OR INJURY TO PERSONS.
11. IT SHALL BE THE RESPONSIBILITY OF THE CONTRACTOR TO PERFORM CONSTRUCTION STAKE-OUT OF ALL BUILDINGS AND SITE IMPROVEMENTS.
12. THE CONTRACTOR SHALL PROVIDE AND PAY FOR ALL MATERIALS, LABOR, TOOLS EQUIPMENT, WATER, SANITARY FACILITIES, LIGHT, POWER, HEAT, TELEPHONE, TRANSPORTATION AND SUPERINTENDENCE FOR TEMPORARY CONSTRUCTION, SERVICES AND FACILITIES OF EVERY NATURE WHATSOEVER NECESSARY TO EXECUTE, COMPLETE AND DELIVER THE WORK WITHIN THE SPECIFIED TIME.
13. THE CONTRACTOR SHALL MAINTAIN AND PROTECT TRAFFIC AS REQUIRED DURING THE COURSE OF CONSTRUCTION IN SUCH A MANNER SATISFACTORY TO THE OWNER'S FIELD REPRESENTATIVE AND ANY OTHER AUTHORITY HAVING JURISDICTION.
14. THE CONTRACTOR SHALL CLEAN UP AND REMOVE ALL REFUSE RUBBISH, SCRAP MATERIALS, UNSUITABLE MATERIALS AND DEBRIS CAUSED BY HIS/HER OPERATIONS SO THAT, AT ALL TIMES, THE SITE OF THE WORK SHALL PRESENT A NEAT, ORDERLY AND WORKMANLIKE APPEARANCE.
15. THE CONTRACTOR SHALL, AT HIS/HER OWN EXPENSE, REPAIR OR REPLACE ALL GROUND SURFACES, PAVEMENTS, SIDEWALKS, CURBS, ETC., WHICH ARE TO REMAIN AND WHICH MAY BECOME DISTURBED OR DAMAGED DUE TO HIS/HER OPERATION.
16. AS MANDATED BY THE STATE OF NEW JERSEY, THE CONTRACTOR MUST RECYCLE THE FOLLOWING CONSTRUCTION MATERIALS AND DEMOLITION DEBRIS WHICH MAY INCLUDE, BUT IS NOT LIMITED TO, CONCRETE ASPHALT, WOOD, METALS, BRICKS, BLOCK MASONRY, WALLBOARD, DIRT, ROCKS, LANDSCAPE WASTE, AND OTHER INERT WASTE. IT IS THE RESPONSIBILITY OF THE CONTRACTOR TO PROPERLY RECYCLE THESE ITEMS. UPON DISPOSAL OF THESE ITEMS THE CONTRACTOR MUST OBTAIN A WEIGHT TONNAGE SLIP THAT SHALL BE FORWARDED TO THE DEPARTMENT OF PUBLIC WORKS FOR RECYCLING TONNAGE CREDIT.
17. ANY SOIL TRACKED ONTO RT. 17 MUST BE IMMEDIATELY REMOVED. IF TRACKED SOIL REMAINS OVERNIGHT, THE UPPER SADDLE RIVER DEPARTMENT OF PUBLIC WORKS SHALL REMOVE IT AND ASSESS THE APPLICANT FOR THOSE COSTS.

OUTSIDE AGENCY APPROVALS

1. SITE PLAN EXEMPTION PERMIT APPROVED BY THE BERGEN COUNTY PLANNING BOARD (FILE #SPEX20-03): APPROVED ON 1/22/2020
2. SOIL EROSION AND SEDIMENT CONTROL PERMIT APPROVED BY THE BERGEN COUNTY SOIL CONSERVATION (FILE #20-2345): CERTIFIED ON 2/13/2020
3. NEW JERSEY DEPARTMENT OF TRANSPORTATION MINOR ACCESS PERMIT: PENDING
4. RAMSEY BOARD OF PUBLIC UTILITY UNDER THE TEN CESS AGREEMENT (AGREEMENT): PENDING

LEGEND

	PROPOSED BUILDING
	PROPOSED CURB
	PROPOSED MODULAR CONCRETE BLOCK RETAINING WALL
7	PROPOSED PARKING STALL
	PROPOSED STRIPING
1	PROPOSED DIRECTIONAL SIGN
	PROPOSED CONCRETE AREA
	PROPOSED FENCE

GRAPHIC SCALE

20 0 10 20 40 80

(IN FEET)
1" = 20'-0"

L2A LAND DESIGN LLC
60 GRAND AVENUE
ENGLEWOOD, NJ 07631
201.227.0300 • 201.227.0001 (Fax)
www.L2Alanddesign.com
New Jersey Certificate of Authorization No. 24GA28139600

10/1/2020

Michael E. Dipple, P.E. Date

New Jersey Professional Engineer #24GE04081200

WARNING: IF THIS PLAN DOES NOT CONTAIN A RAISED IMPRESSION SEAL OVER THE PROFESSIONAL SIGNATURE IT IS NOT AN AUTHORIZED OFFICIAL COPY

APPLICANT:
PSI ATLANTIC USR NJ, LLC
530 OAK COURT DRIVE, SUITE 185
MEMPHIS, TN 38117
901.290.0184 (PHONE)

OWNER:
KRISJUEN REALTY, L.P.
A NEW JERSEY LIMITED PARTNERSHIP
7 INDUSTRIAL AVENUE
MAHWAH, NJ 07430
201.525.6292 (PHONE)

ARCHITECT:
PARKER STUDIOS
1300 MINT STREET, SUITE 110
CHARLOTTE, NC 28203
980.819.0416 (PHONE)

SURVEYOR:
LAKELAND SURVEYING, INC.
4 WEST MAIN STREET
ROCKAWAY, NJ 07866
973.625.5670 (PHONE)
973.625.4121 (FAX)

NO.	REVISION	DATE
1	REVISED PER COMPLETENESS REVIEW	5/17/2020
2	REVISED DRAINAGE PER NJDOT COMMENTS, DATED 7/21/2020	8/17/2020
3	REVISED PER PLANNING BOARD RESUBMISSION	10/1/2020

Previous Editions Obsolete

PROJECT LOCATION:
PROPOSED SELF-STORAGE FACILITY
100 N.J.S.H. ROUTE 17 NORTH
BOROUGH OF UPPER SADDLE RIVER,
BERGEN COUNTY, NJ

BLOCK: 1304; LOT: 7.01
TAX MAP: 13

DRAWING TITLE:
SITE PLAN

SCALE:	REFER TO PLAN
DATE:	1/17/2020
DESIGNED:	TEC
APPROVED:	MED
L2A PROJ. No.:	1901.161
DRAWING No.:	C-03

"L2A LAND DESIGN, LLC" - ALL RIGHTS RESERVED
THE COPY OR REUSE OF THIS DOCUMENT, OR PORTIONS THEREOF, FOR USE OTHER THAN THE PURPOSE ORIGINALLY INTENDED, WITHOUT THE WRITTEN PERMISSION OF L2A LAND DESIGN, LLC IS PROHIBITED.

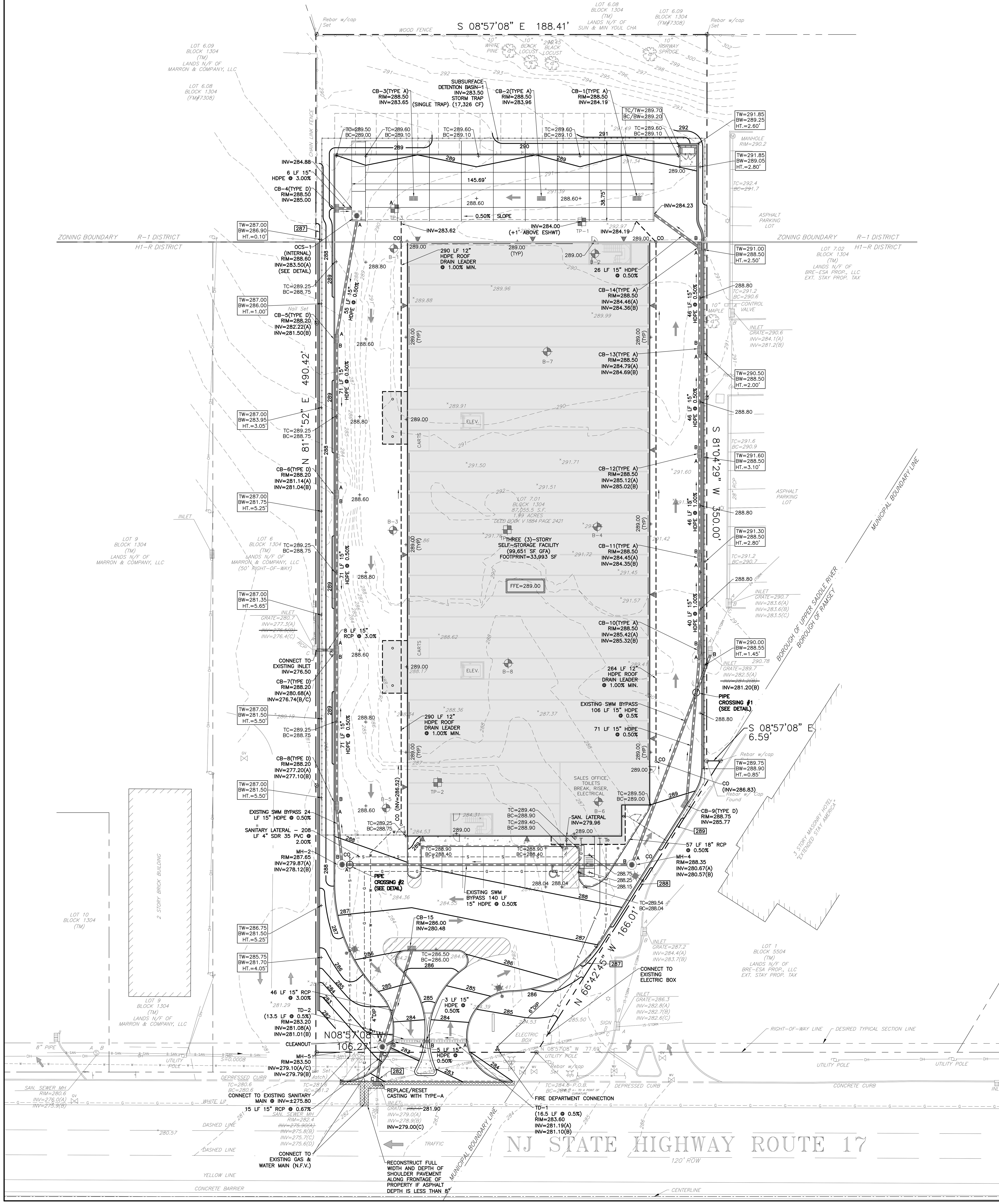

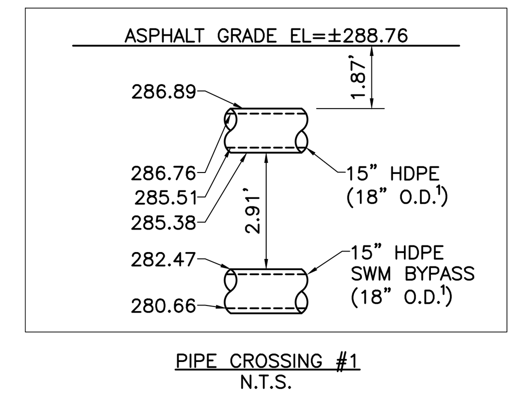

PIPE CROSSING #1
N.T.S.

NOTES:
1. ALL PIPE SEPARATION DIMENSIONS HAVE BEEN ADJUSTED TO ACCOUNT FOR PIPE WALL THICKNESS (TOTAL) USING THE FOLLOWING STANDARDS:
   - 15" HDPE (O.D. = 18"; WALL THICKNESS = 3.0")

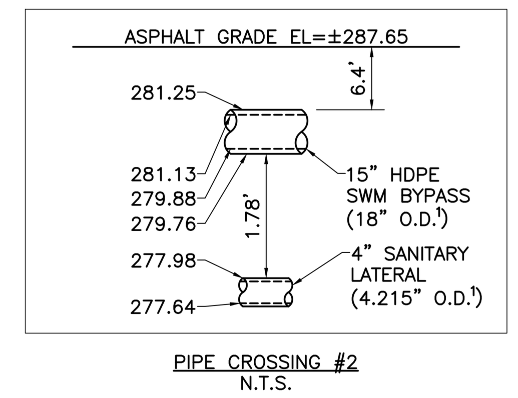

PIPE CROSSING #2
N.T.S.

NOTES:
1. ALL PIPE SEPARATION DIMENSIONS HAVE BEEN ADJUSTED TO ACCOUNT FOR PIPE WALL THICKNESS (TOTAL) USING THE FOLLOWING STANDARDS:
   - 15" HDPE (O.D. = 18"; WALL THICKNESS = 3.0")
   - 4" SDR 35 PVC (O.D. = 4.215"; WALL THICKNESS = 0.215")

GRADING, EXCAVATION, AND BACKFILLING NOTES:

1. THE ELEVATIONS SHOWN ON THESE PLANS REFER TO NAVD 1988.
2. THE CONTRACTOR SHALL PREVENT WATER FROM ENTERING EXCAVATED AREA AND MAINTAIN A DRY CONDITION AT ALL TIMES.
3. DO NOT PLACE FILL OR BACKFILL ON FROZEN SUBGRADE.
4. THE CONTRACTOR SHALL BE RESPONSIBLE FOR REMOVING AND REPLACING ALL SOFT, YIELDING OR UNSUITABLE SOIL MATERIAL. ALL EXCAVATED OR FILLED AREAS SHALL BE COMPACTED TO 95% OF MODIFIED PROCTOR DENSITY PER ASTM TEST D-1557. MOISTURE CONTENT AT TIME OF PLACEMENT SHALL NOT EXCEED 2% ABOVE NOR 3% BELOW OPTIMUM.
5. PROPOSED TOP OF CURB ELEVATIONS ARE GENERALLY 6" ABOVE EXISTING LOCAL ASPHALT GRADE UNLESS OTHERWISE NOTED. FIELD ADJUST TO CREATE A MINIMUM OF 0.75% GUTTER GRADE ALONG CURB FACE.
6. FULL LENGTH OF EXPOSED CURB HEIGHT TRANSITION FROM 4" TO 6" SHALL OCCUR ENTIRELY OUTSIDE OF NEW JERSEY DEPARTMENT OF TRANSPORTATION RIGHT OF WAY.
7. FLO-GARD + PLUS INLET FILTERS SHALL BE INSTALLED ON PROPOSED TRENCH DRAINS TD-1 AND TD-2.
8. THIS PROPERTY IS LOCATED WITHIN ZONE "X" (OTHER FLOOD AREAS) OF THE FLOOD INSURANCE RATE MAP NO. 34003C0086J EFFECTIVE DATE OF AUGUST 28, 2019. ZONE 'X': AREAS OF 0.2% ANNUAL CHANCE FLOOD.

UTILITY NOTES

1. LOCATION OF ELECTRIC AND COMMUNICATION SERVICES IS APPROXIMATE AND MUST BE CONFIRMED BY SERVICE PROVIDER. LOCATIONS OF TRANSFORMERS, PULL BOXES, ETC., AS WELL AS CONSTRUCTION SPECIFICATIONS TO BE DETERMINED AT PRE-CONSTRUCTION MEETING WITH UTILITY PROVIDER.
2. IT IS THE CONTRACTORS RESPONSIBILITY TO CALL THE NJ ONE CALL CENTER A MINIMUM OF 72 HOURS PRIOR TO THE COMMENCEMENT OF ANY CONSTRUCTION.
3. LOCATION OF EXISTING UTILITIES IS APPROXIMATE. CONTRACTOR SHALL VERIFY LOCATIONS INDEPENDENTLY PRIOR TO THE COMMENCEMENT OF CONSTRUCTION. CONTRACTOR SHALL NOTIFY ENGINEER IMMEDIATELY SHOULD DISCREPANCIES EXIST.
4. CONTRACTOR SHALL REFER TO ARCHITECTURAL DRAWINGS FOR EXACT LOCATION OF UTILITY CONNECTIONS TO BUILDING(S). SHOULD ANY DISCREPANCIES EXIST, THE ARCHITECTURAL PLANS SHALL GOVERN. CONTRACTOR SHALL NOTIFY ENGINEER IMMEDIATELY SHOULD DISCREPANCIES IN UTILITY SERVICES EXIST.
5. SHOULD INTERFERENCE BETWEEN UTILITIES BE ENCOUNTERED, THE CONTRACTOR SHALL CONTACT THE ENGINEER IMMEDIATELY.
6. WHERE SHOWN ON THE CONTRACT DRAWINGS, ADJUST THE CASTINGS OF EXISTING CATCH BASINS, MANHOLES AND VALVE BOXES TO FINISHED GRADE OF NEW PAVEMENT.
7. CIRCULAR REINFORCED CONCRETE PIPE SHALL BE CLASS III UNLESS OTHERWISE STATED ON THE CONTRACT DRAWINGS. (ASTM C-76, ASTM C-443, AASHTO M-170).
8. WHERE CONNECTIONS TO EXISTING DRAINAGE OR SANITARY STRUCTURES ARE REQUIRED, CUT NEATLY WITHOUT PERCUSSION INTO THE EXISTING STRUCTURE. THE MAXIMUM SIZE OF THE OPENING SHALL NOT EXCEED THE PIPE'S OUTER DIAMETER PLUS THREE (3") INCHES. CONNECT THE NEW PIPE AND SEAL AROUND IT WITH SIKAFLEX-2C OR APPROVED EQUAL.
9. PORTLAND CEMENT CONCRETE SHALL BE CLASS B, 28 DAY COMPRESSIVE STRENGTH OF 4,500 PSI, AIR-ENTRAINED UNLESS OTHERWISE NOTED. ALL EXISTING UTILITIES SHALL BE ADJUSTED TO FINAL GRADE IN ACCORDANCE WITH CURRENT TOWNSHIP REQUIREMENTS AND PRACTICES.
10. THE ROADWAY AND CURBING MARK-OUTS MUST BE ESTABLISHED PRIOR TO THE INSTALLATION OF NEW UTILITIES.
11. DUCTILE IRON CEMENT PIPE SHALL BE CLASS 52 FOR DIAMETERS FOUR (4) INCHES AND LARGER.
12. STORM DRAIN PIPES SHALL BE REINFORCED CONCRETE PIPE IN ALL CASES AND SHALL BE OF THE SIZE SPECIFIED AND LAID TO THE EXACT LINES AND GRADES APPROVED BY THE ENGINEER.
13. REINFORCED CONCRETE PIPE SHALL CONFORM TO A.S.T.M. SPECIFICATIONS C76.
14. ALL PIPES SHALL BE CLASS III STRENGTH EXCEPT WHERE STRONGER PIPE IS REQUIRED AND INDICATED ON THE PLANS.
15. JOINTS SHALL BE MADE WITH O-RING RUBBER GASKETS.
16. ALL SANITARY SEWERAGE TO BE CONSTRUCTED IN ACCORDANCE WITH "STANDARDS FOR THE INSTALLATION OF SANITARY SEWERAGE FACILITIES" PREPARED FOR THE BOROUGH OF RAMSEY, NJ, REVISED JULY 2002.
17. SEPARATE UTILITY PERMITS ARE REQUIRED FOR EACH UTILITY INSTALLATION PROPOSED WITHIN THE STATE RIGHT-OF-WAY. APPLICANT FOR PERMITS MUST BE A UTILITY COMPANY.
18. ALL WORK FOR SANITARY SEWER LATERAL PERFORMED IN THE RIGHT-OF-WAY CONNECTION TO THE SANITARY SEWER, ARE UNDER THE JURISDICTION OF THE BOROUGH OF RAMSEY BOARD OF PUBLIC WORKS. CREW WILL INSPECT THIS WORK AND WILL NEED AT LEAST 72-HOUR ADVANCE NOTICE FROM THE APPLICANT OR THEIR CONTRACTOR PRIOR TO THE START OF CONSTRUCTION. ALL WORK FOR SEWER LATERAL ON THE PROPERTY IS UNDER THE JURISDICTION OF THE BOROUGH OF UPPER SADDLE RIVER CONSTRUCTION PLUMBING SUBCODE OFFICIAL, AND THE APPLICANT IS RESPONSIBLE FOR PROVIDING PROPER NOTIFICATION TO THE DEPARTMENT AND TO SECURE THE REQUIRED PLUMBING PERMIT.
19. BEFORE THE START OF WORK ON CONNECTING TO THE SEWER, THE CONTRACTOR MUST SUBMIT A CERTIFICATE OF INSURANCE (COI) TO CREW, COMPLYING WITH THE BOROUGH OF RAMSEY STANDARDS. THE COI MUST BE REVIEWED AND APPROVED BY THE BOROUGH'S INSURANCE CONSULTANT
20. BEFORE THE START OF WORK, THE APPLICANT OR THEIR CONTRACTOR MUST SUBMIT SHOP DRAWINGS TO OUR OFFICE FOR ALL RELEVANT ITEMS AND PRODUCTS THAT WILL BE USED ON THE PROJECT FOR THE SANITARY SEWER LATERAL.

TEST PIT DATA

IDENTIFICATION LABEL	ESTIMATED SEASONAL HIGH WATER TABLE [1]
TP-1	ELEV. 283.00
TP-2	ELEV. 279.50
TP-3	ELEV. 280.50
TP-4	ELEV. 279.00

1. TEST PIT DATA BASED ON L2A LAND DESIGN, LLC FIELD OBSERVATIONS ON 3/21/16. THE OBSERVATIONS WERE REVIEWED IN THE FIELD BY A REPRESENTATIVE OF JOHNSON SOILS COMPANY. REFER TO L2A LAND DESIGN, LLC MEMORANDUM, DATED 3/22/16. REFER TO THE APPENDIX OF THE STORMWATER MANAGEMENT REPORT.

EXSTIMATED SEWAGE DEMAND:

TYPE OF ESTABLISHMENT [1]	NUMBER OF UNITS	GPD PER UNIT [2]	GPD
WAREHOUSES	(2) EMPLOYEES	25	50
PROJECTED FLOW			50 GPD

1. CALCULATED PER N.J.A.C. 7:14 - 23.3 (PROJECTED FLOW CRITERIA).
2. GPD = GALLONS PER DAY
3. AS PER THE CREW ENGINEERING LETTER, DATED JULY 7, 2016, THE TEN CEES AGREEMENT HAS ALLOCATED 3,208 GPD OF SANITARY SEWER DISCHARGE FOR THIS SITE (LOT 7.01). THEREFORE, THE PROPOSED 50 GPD IS LESS THAN THE ALLOWABLE REDISTRIBUTED SEWER ALLOCATION AMOUNT FOR THE PROPETY.

VERTICAL DATUM = NAVD88

LEGEND

+ 62.00	PROPOSED SPOT ELEVATION
62	PROPOSED CONTOUR LINE
	PROPOSED STORM MANHOLE
	PROPOSED INLETS
	PROPOSED STORM MAIN
— — S — —	PROPOSED SANITARY LINE
— — G — —	PROPOSED GAS LINE
— — W — —	PROPOSED WATER LINE
——F——	PROPOSED FIRE LINE
— — E — —	PROPOSED ELECTRIC LINE
	NJ STATE HIGHWAY ROUTE 17 SHOULDER PAVEMENT REMOVAL & REPLACEMENT
B-1	NUMBER & APPROXIMATE LOCATION OF GEOTECH. BORING (PER JOHNSON SOILS COMPANY)
TP-1	NUMBER & APPROXIMATE LOCATION OF SOIL TEST PITS (PER L2A LAND DESIGN, LLC)

GRAPHIC SCALE

20 0 10 20 40 80

(IN FEET)
1" = 20'-0"

L2A
LAND DESIGN LLC
60 GRAND AVENUE
ENGLEWOOD. NJ 07631
201.227.0300 • 201.227.0001 (Fax)
www.L2Alanddesign.com
New Jersey Certificate of Authorization No. 24GA28130900

10/1/2020
Michael E. Dipple, P.E. Date
New Jersey Professional Engineer #24GE04081200

WARNING: IF THIS PLAN DOES NOT CONTAIN A RAISED IMPRESSION SEAL OVER THE PROFESSIONAL SIGNATURE IT IS NOT AN AUTHORIZED OFFICIAL COPY.

APPLICANT:
PSI ATLANTIC USR NJ, LLC
530 OAK COURT DRIVE, SUITE 185
MEMPHIS, TN 38117
901.290.0184 (PHONE)

OWNER:
KRISUJEN REALTY, L.P.
A NEW JERSEY LIMITED PARTNERSHIP
7 INDUSTRIAL AVENUE
MAHWAH, NJ 07430
201.525.6292 (PHONE)

ARCHITECT:
PARKER STUDIOS
1300 MINT STREET, SUITE 110
CHARLOTTE, NC 28203
980.819.0416 (PHONE)

SURVEYOR:
LAKELAND SURVEYING, INC.
4 WEST MAIN STREET
ROCKAWAY, NJ 07866
973.625.5670 (PHONE)
973.625.4121 (FAX)

NO.	REVISION	DATE
1	REVISED PER COMPLETENESS REVIEW	5/1/2020
2	REVISED DRAINAGE PER NJDOT COMMENTS, DATED 7/21/2020	8/12/2020
3	REVISED PER PLANNING BOARD RESUBMISSION	10/1/2020

Previous Editions Obsolete

PROJECT LOCATION:
PROPOSED SELF-STORAGE FACILITY
100 N.J.S.H. ROUTE 17 NORTH
BOROUGH OF UPPER SADDLE RIVER,
BERGEN COUNTY, NJ

BLOCK: 1304; LOT: 7.01
TAX MAP: 13

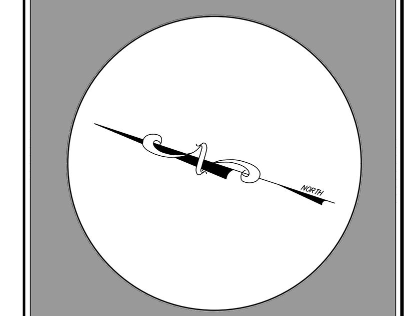

DRAWING TITLE:
GRADING, DRAINAGE & UTILITY PLAN

SCALE:	REFER TO PLAN
DATE	1/17/2020
DESIGNED:	TEC
APPROVED:	MED
L2A PROJ. No.:	1901.161
DRAWING No.:	C-04

L2A LAND DESIGN, LLC — ALL RIGHTS RESERVED
THE COPY OR REUSE OF THIS DOCUMENT, OR PORTIONS THEREOF, FOR USE OTHER THAN THE PURPOSE ORIGINALLY INTENDED, WITHOUT THE WRITTEN PERMISSION OF L2A LAND DESIGN, LLC IS PROHIBITED.

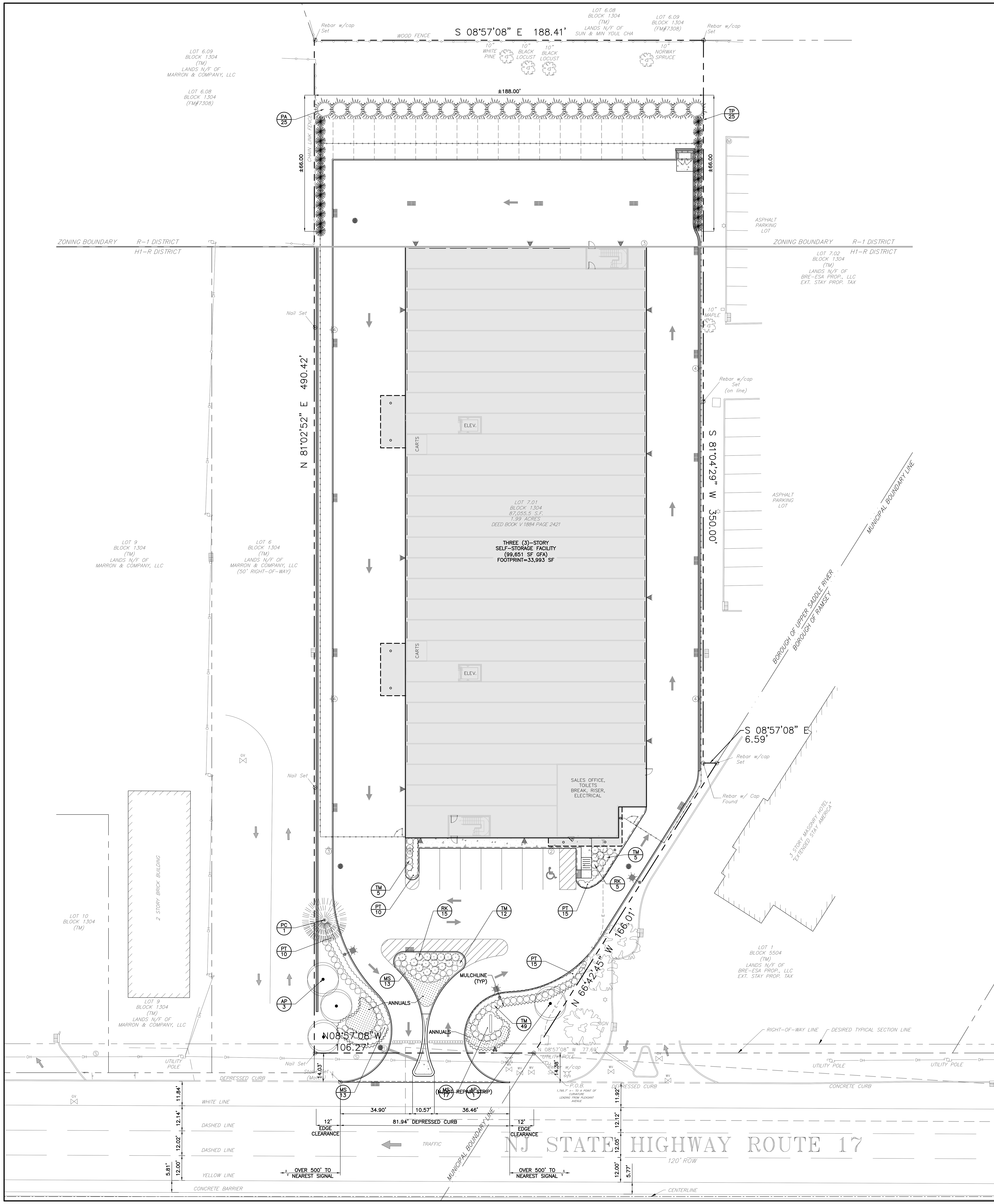

PLANTING SPECIFICATIONS

1. SCOPE OF WORK
   A. THIS WORK SHALL CONSIST OF PERFORMING, CLEARING AND SOIL PREPARATION, FINISH GRADING, PLANTING AND DRAINAGE, INCLUDING ALL LABOR, MATERIALS, TOOLS, EQUIPMENT, AND ANY OTHER APPURTENANCES NECESSARY FOR THE COMPLETION OF THIS PROJECT.
2. MATERIALS
   A. GENERAL - ALL MATERIALS SHALL BE BEST OF ITS KIND AVAILABLE.
   B. PLANTS - ALL PLANTS SHALL BE HEALTHY OR NORMAL GROWTH, WELL ROOTED, FREE FROM DISEASE AND INSECTS.
   C. TOPSOIL - ORGANIC TOPSOIL FREE OF DEBRIS, ROCKS LARGER THAN TWO INCHES (2"), WOOD, ROOTS, VEGETABLE MATTER AND CLAY CLODS.
   D. MULCH - DOUBLE SHREDDED HARDWOOD BARK MULCH.
3. FERTILIZER AND SOIL CONDITIONER
   A. ORGANIC FERTILIZER - SHALL BE PROCESSED SEWER SLUDGE WITH MINIMAL CONTENT OF 1% NITROGEN AND 2% PHOSPHORIC ACID, EQUAL TO 'NITROHUMIS'.
   B. ORGANIC FERTILIZER AND SOIL CONDITIONER - SHALL BE 'GRO- POWER' AND ORGANIC BASE MATERIALS COMPRISED OF DECOMPOSED ANIMAL AND VEGETABLE MATTER AND COMPOSTED TO SUPPORT BACTERIAL CULTURES, CONTAINING NO POULTRY, ANIMAL OR HUMAN WASTE. GUARANTEED ANALYSIS (5-3-1) NITROGEN 5%. PHOSPHATE 3%, POTASH 1%. 50% HUMUS AND 15% HUMIC ACIDS.
4. GENERAL WORK PROCEDURES:
   LANDSCAPE WORK SHALL BE ACCORDING TO THE WORKMANLIKE STANDARDS ESTABLISHED FOR LANDSCAPE CONSTRUCTION AND PLANTING.
5. WEEDING:
   BEFORE AND DURING PRELIMINARY GRADING AND FINISH GRADING, ALL WEEDS AND GRASSES SHALL BE DUG OUT BY THE ROOTS AND DISPOSED OF AT THE CONTRACTOR'S EXPENSE.
6. TOPSOILING:
   CONTRACTOR TO PROVIDE FOUR INCHES (4") MINIMUM THICK TOPSOIL LAYER IN ALL PLANTING AREAS. TOPSOIL SHOULD BE SPREAD OVER A PREPARED SURFACE IN A UNIFORM LAYER TO PRODUCE A FOUR INCH (4") COMPACTED THICKNESS. TOPSOIL PRESENT AT THE SITE, IF ANY, MAY BE USED TO SUPPLIMENT TOTAL AMOUNT REQUIRED. CONTRACTOR TO FURNISH AN ANALYSIS OF ON-SITE TOPSOIL UTILIZED IN ALL PLANTING AREAS. ADJUST pH AND NUTRIENT LEVELS AS REQUIRED TO ENSURE AN ACCEPTABLE GROWING MEDIUM.
7. SOIL CONDITIONING
   CULTIVATE ALL AREAS TO BE PLANTED TO A DEPTH OF 6". ALL DEBRIS EXPOSED FROM EXCAVATION AND CULTIVATION SHALL BE DISPOSED OF AT THE CONTRACTOR'S EXPENSE. SPREAD EVENLY IN ALL PLANTING AREAS AND TILL (2 DIRECTIONS) INTO TOP 4" WITH THE FOLLOWING PER 1,000 SQ. FT:
   150 POUNDS 'GRO-POWER'
   100 POUNDS AGRICULTURAL GYPSUM
   20 POUNDS NITROFORM (COURSE) 38-0-0 BLUE CHIP
   SOIL MODIFICATIONS:
   THOUROUGHLY TILL ORGANIC MATTER INTO THE TOP 6 TO 12 IN. OF MOST PLANTING SOILS TO IMPROVE THE SOIL'S ABILITY TO RETAIN WATER AND NUTRIENTS. USE COMPOSTED BARK, RECYCLED YARD WASTE, PEAT MOSS, OR MUNICIPAL PROCESSED SEWAGE SLUDGE. ALL PRODUCTS SHOULD BE COMPOSTED TO A DARK COLOR AND BE FREE OF PIECES WITH IDENTIFIABLE LEAF OR WOOD STRUCTURE. RECYCLED MATERIAL BY THE SUPPLIER. AVOID MATERIAL WITH A pH HIGHER THAN 7.5. MODIFY HEAVY CLAY OR SILT (MORE THAN 40% CLAY OR SILT) BY ADDING COMPOSTED PINE BARK (UP TO 30% BY VOLUME) AND/OR GYPSUM. COARSE SAND MAY BE USED IF ENOUGH IS ADDED TO BRING THE SAND CONTENT TO MORE THAN 60% OF THE TOTAL MIX. IMPROVE DRAINAGE IN HEAVY SOILS BY PLANTING ON RAISED MOUNDS OR BEDS AND INCLUDING SUBSURFACE DRAINAGE LINES. MODIFY EXTREMELY SANDY SOILS (MORE THAN 85% SAND) BY ADDING ORGANIC MATTER AND/OR DRY, SHREDDED CLAY LOAM UP TO 30% OF THE TOTAL MIX.
8. PLANTING - POSITION TREES AND SHRUBS AT THEIR INTENDED LOCATIONS AS PER THE PLANS AND SECURE THE APPROVAL OF THE LANDSCAPE ARCHITECT BEFORE EXCAVATING PITS, MAKING NECESSARY ADJUSTMENTS AS DIRECTED.
   A. PLANTING PITS SHALL BE DUG WITH LEVEL BOTTOMS, WITH WIDTH 1 1/2 TIMES THE DIAMETER OF ROOT BALL AND 3" DEEPER THAN THE LENGTH OF ROOT BALL. EACH PLANT PIT SHALL BE BACK FILLED WITH THE FOLLOWING PREPARED SOIL MIXED THOROUGHLY:
      -1 PART PEATMOSS; 1 PART COW MANURE BY VOLUME; 3 PARTS TOPSOIL BY VOLUME; 21 GRAM 'AGRIFORM' PLANTING TABLETS AS FOLLOWS:
      -2 TABLETS PER 1 GAL. PLAN; 3 TABLETS PER 5 GAL. PLANT; 4 TABLETS PER 15 GAL. PLANT; (FOR LARGER PLANTS USE TWO (2)TABLETS PER 1/2" DIAM. OF TRUNK CALIPER)
   B. PREPARED SOIL SHALL BE TAMPED FIRMLY AT BOTTOM OF PIT. FILL PREPARED SOIL AROUND BALL OF PLANT 1/2 WAY, AND INSERT PLANT TABLETS. COMPLETE BACKFILL AND WATER THOROUGHLY.
   C. ALL PLANTS SHALL BE SET SO THAT, THEY BEAR THE SAME RELATION TO THE REQUIRED GRADE AS THEY BORE TO THE NATURAL GRADE BEFORE BEING TRANSPLANTED.
   D. IMMEDIATELY AFTER PLANTING, STAKE ALL TREES TO PREVENT DAMAGE FROM WIND (LODGE-POLE STAKES LENGTH AS REQUIRED). FASTEN TREES TO UPPER END OF STAKE IN AT LEAST TWO (2) PLACES USING HOSE TYPE TIES. GUY AND STAKE TREES 3 DIRECTIONS WITH GALVANIZED WIRE, THROUGH FLEXIBLE HOSE CHAFING GUARDS, WITH WOODEN STAKE ANCHORS. WRAP TREE TRUNK FROM GROUND TO FIRST BRANCH WITH TREE WRAPPING TAPE.
   E. PREPARE RAISED EARTH BASIN AS WIDE AS PLANTING HOLE OF EACH TREE.
   F. WATER IMMEDIATELY AFTER PLANTING. WATER SHALL BE APPLIED TO EACH TREE AND SHRUB IN SUCH MANNER AS NOT TO DISTURB BACK FILL AND TO THE EXTENT THAT ALL MATERIALS IN THE PLANTING HOLE ARE THOROUGHLY SATURATED.
   G. PRUNE ALL PROPOSED TREES DIRECTLY ADJACENT TO WALKWAYS TO A MIN. OF 7' BRANCHING HEIGHT.
9. GROUND COVER
   A. ALL GROUND COVER AREAS SHALL RECEIVE A 1/4" LAYER OF HUMUS RAKED INTO THE TOP 1" OF PREPARED SOIL PRIOR TO PLANTING GROUND COVER.
   B. SPACING AND VARIETY OF GROUND COVER SHALL BE AS SHOWN ON DRAWINGS.
   C. IMMEDIATELY AFTER PLANTING GROUND COVER, CONTRACTOR SHALL THOROUGHLY WATER GROUND COVER.
   D. ALL GROUND COVER AREAS SHALL BE TREATED WITH A PRE-EMERGENT BEFORE FINAL LANDSCAPE INSPECTION. GROUND COVER AREAS SHALL BE WEEDED PRIOR TO APPLYING PRE-EMERGENT. PRE-EMERGENT TO BE APPLIED AS PER MANUFACTURER'S RECOMMENDATION.
10. FINISH GRADING
   A. ALL AREAS WILL BE RECEIVED BY THE CONTRACTOR ATSUBSTANTIALLY PLUS/MINUS .1 FOOT OF FINISH GRADE.
   B. ALL LAWN AND PLANTING AREAS SHALL BE GRADED TO A SMOOTH, EVEN AND UNIFORM PLANE WITH NO ABRUPT CHANGE OF SURFACE, UNLESS OTHERWISE DIRECTED BY LANDSCAPE ARCHITECT. SOIL AREAS ADJACENT TO THE BUILDINGS SHALL SLOPE AWAY.
   C. ALL PLANTING AREAS SHALL BE GRADED AND MAINTAINED TO ALLOW FREE FLOW OF SURFACE WATER.
11. GUARANTEE: CONTRACTOR SHALL GUARANTEE ALL PLANTS AND LAWN FOR A PERIOD OF TWO (2) YEARS FROM ACCEPTANCE OF JOB.
12. CLEANUP: UPON THE COMPLETION OF ALL PLANTING WORK AND BEFORE FINAL ACCEPTANCE, THE CONTRACTOR SHALL REMOVE ALL MATERIAL, EQUIPMENT, AND DEBRIS RESULTING FROM HIS WORK. ALL PAVED AREAS SHALL BE BROOM CLEANED AND THE SITE LEFT IN A NEAT AND ACCEPTABLE CONDITION AS APPROVED BY THE OWNER'S AUTHORIZED REPRESENTATIVE. MAINTAIN TREES, SHRUBS AND OTHER PLANTS BY PRUNING, CULTIVATING AND WEEDING AS REQUIRED FOR HEALTHY GROWTH. RESTORE PLANTING SAUCERS. TIGHTEN AND REPAIR STAKE AND GUY SUPPORTS AND RESET TREES AND SHRUBS TO PROPER GRADES OR VERTICAL POSITION AS REQUIRED. RESTORE OR REPLACE DAMAGED WRAPPINGS. SPRAY WITH HERBICIDE AS REQUIRED TO KEEP TREES AND SHRUBS FREE OF INSECTS AND DISEASE. MAINTAIN LAWNS BY WATERING, FERTILIZING, WEEDING, MOWING, TRIMMING, AND OTHER OPERATIONS SUCH AS ROLLING, REGRADING AND REPLANTING AS REQUIRED TO ESTABLISH A SMOOTH, ACCEPTABLE LAWN, FREE OF ERODED OR BARE AREAS.
13. MAINTENANCE (ALTERNATE BID) COST PER MONTH AFTER INITIAL 60-DAY MAINTENANCE PERIOD.
14. LANDSCAPING IMPROVEMENTS SHALL BE ENSURED WITH A PERFORMANCE BOND.

PLANTING SCHEDULE

SYMBOL	CODE	BOTANICAL NAME	COMMON NAME	QTY.	SIZE	COMMENTS
TREES						
	TP	THUJA PLICATA 'GREEN GIANT'	GREEN GIANT ARBORVITAE	25	8' - 10' HEIGHT	N/A
	PA	PICEA ABIES	NORWAY SPRUCE	25	8' - 10' HEIGHT	N/A
	PC	PYRUS CALLERYANA 'ARISTOCRAT'	ARISTOCRAT CALLERY PEAR	1	4" CALIPER	N/A
	AP	ACER PALMATUM	DWARF JAPANESE MAPLE	4	2'-3' HEIGHT	N/A

PLANTING SCHEDULE

SYMBOL	CODE	BOTANICAL NAME	COMMON NAME	QTY.	SIZE	COMMENTS
SHRUBS						
	RK	ROSA V. RED KNOCKOUT	RED KNOCKOUT ROSE	20	3 GALLON	N/A
	TM	TAXUS MEDIA 'DENSIFORMIS'	COMPACT SPREADING YEW	71	24" - 30" HEIGHT	N/A

PLANTING SCHEDULE

SYMBOL	CODE	BOTANICAL NAME	COMMON NAME	QTY.	SIZE	COMMENTS
PERENNIALS						
	PT	PACHYSANDRA TERMINALIS	JAPANESE SPURGE	50	FLATS	50 PER FLAT
GRASSES/FERNS						
	MS	MISCANTHUS SINENSIS V. GRACILLIMUS	GRACILLIMUS MAIDEN GRASS	30	2 GALLON	N/A

LEGEND

RM / 4 — SYMBOL / QUANTITY	NEW PLANTING
	PROPOSED MULCH LINE
	PROPOSED ANNUAL PLANTINGS

GRAPHIC SCALE

20 0 10 20 40 80

(IN FEET)
1" = 20'-0"

L2A LAND DESIGN LLC
60 GRAND AVENUE
ENGLEWOOD. NJ 07631
201.227.0300 • 201.227.0001 (Fax)
www.L2Alanddesign.com
New Jersey Certificate of Authorization No. 24GA28130900

10/1/2020
Michael E. Dipple, P.E. Date
New Jersey Professional Engineer #24GE04081200
WARNING: IF THIS PLAN DOES NOT CONTAIN A RAISED IMPRESSION SEAL OVER THE PROFESSIONAL SIGNATURE IT IS NOT AN AUTHORIZED OFFICIAL COPY.

APPLICANT:
PSI ATLANTIC USR NJ, LLC
530 OAK COURT DRIVE, SUITE 185
MEMPHIS, TN 38117
901.290.0184 (PHONE)

OWNER:
KRISUJEN REALTY, L.P.
A NEW JERSEY LIMITED PARTNERSHIP
7 INDUSTRIAL AVENUE
MAHWAH, NJ 07430
201.525.6292 (PHONE)

ARCHITECT:
PARKER STUDIOS
1300 MINT STREET, SUITE 110
CHARLOTTE, NC 28203
980.819.0416 (PHONE)

SURVEYOR:
LAKELAND SURVEYING, INC.
4 WEST MAIN STREET
ROCKAWAY, NJ 07866
973.625.5670 (PHONE)
973.625.4121 (FAX)

NO.	REVISION	DATE
1	REVISED PER COMPLETENESS REVIEW	5/1/2020
2	REVISED DRAINAGE PER NJDOT COMMENTS, DATED 7/21/2020	8/12/2020
3	REVISED PER PLANNING BOARD RESUBMISSION	10/1/2020

Previous Editions Obsolete

PROJECT LOCATION:
PROPOSED SELF-STORAGE FACILITY
100 N.J.S.H. ROUTE 17 NORTH
BOROUGH OF UPPER SADDLE RIVER,
BERGEN COUNTY, NJ

BLOCK: 1304; LOT: 7.01
TAX MAP: 13

NORTH

DRAWING TITLE:
LANDSCAPING PLAN

SCALE:	REFER TO PLAN
DATE	1/17/2020
DESIGNED:	TEC
APPROVED:	MED
L2A PROJ. No.:	1901.161
DRAWING No.:	C-05

L2A LAND DESIGN, LLC – ALL RIGHTS RESERVED
THE COPY OR REUSE OF THIS DOCUMENT, OR PORTIONS THEREOF, FOR USE OTHER THAN THE PURPOSE ORIGINALLY INTENDED, WITHOUT THE WRITTEN PERMISSION OF L2A LAND DESIGN, LLC IS PROHIBITED.

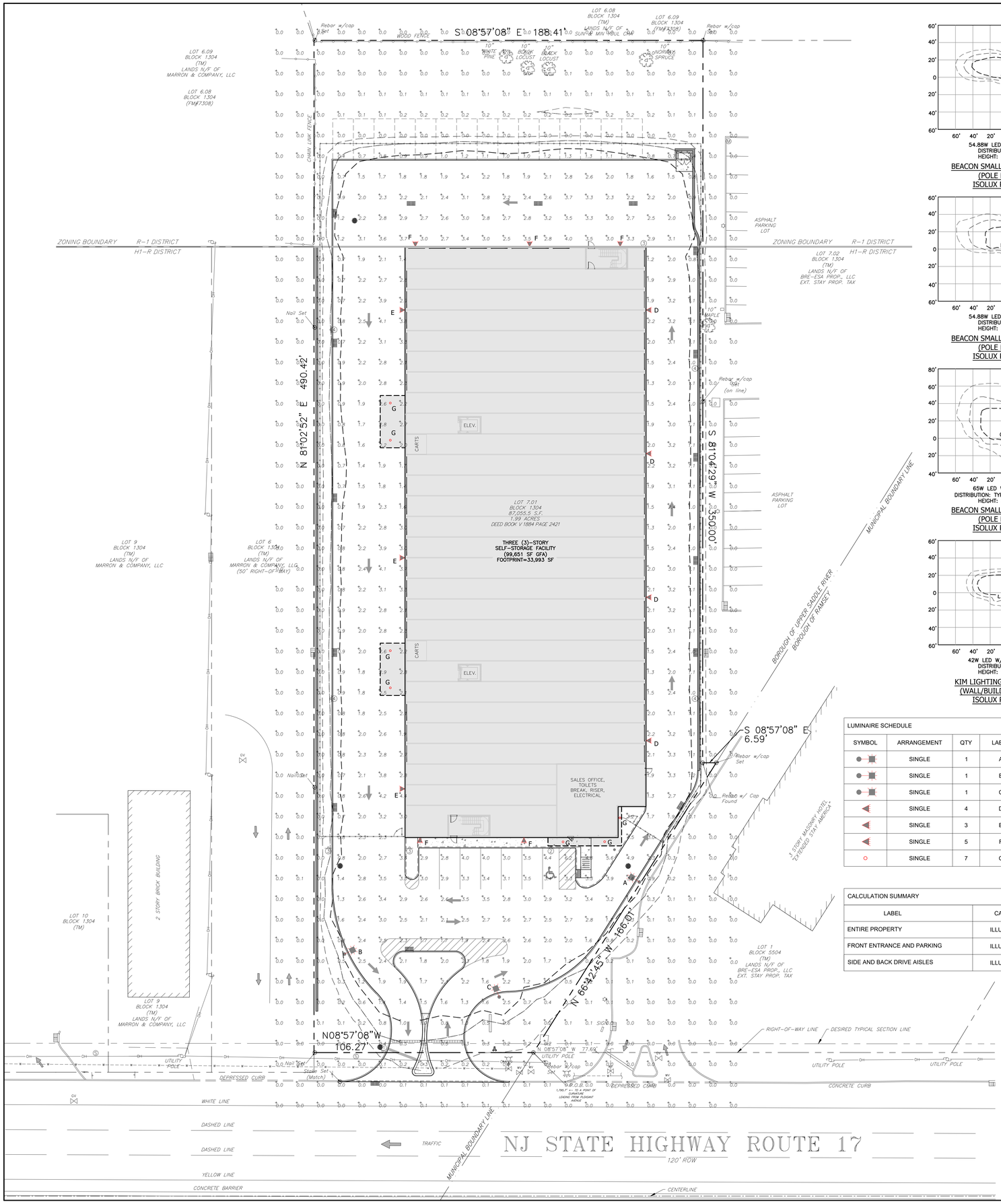

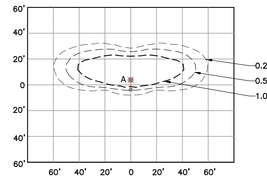

54.88W LED W/ 4000K CCT
DISTRIBUTION: TYPE 2
HEIGHT: 20 FEET AFG

BEACON SMALL VIPER LUMINAIRE
(POLE MOUNTED)
ISOLUX PATTERN "A"

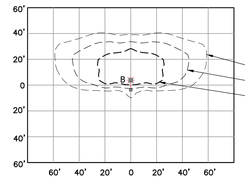

54.88W LED W/ 4000K CCT
DISTRIBUTION: TYPE 3
HEIGHT: 20 FEET AFG

BEACON SMALL VIPER LUMINAIRE
(POLE MOUNTED)
ISOLUX PATTERN "B"

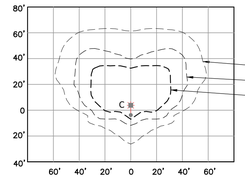

65W LED W/ 4000K CCT
DISTRIBUTION: TYPE 4W (TYPE 4 WIDE)
HEIGHT: 20 FEET AFG

BEACON SMALL VIPER LUMINAIRE
(POLE MOUNTED)
ISOLUX PATTERN "C"

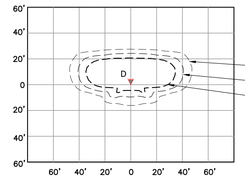

42W LED W/ 4000K, 70 CRI
DISTRIBUTION: TYPE 2
HEIGHT: 16 FEET AFG

KIM LIGHTING WALL DIRECTOR
(WALL/BUILDING MOUNTED)
ISOLUX PATTERN "D"

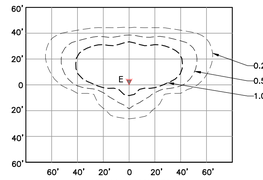

74W LED W/ 4000K, 70 CRI
DISTRIBUTION: TYPE 3
HEIGHT: 16 FEET AFG

KIM LIGHTING WALL DIRECTOR
(WALL/BUILDING MOUNTED)
ISOLUX PATTERN "E"

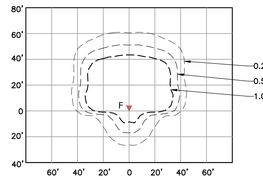

74W LED W/ 4000K, 70 CRI
DISTRIBUTION: TYPE 4F (TYPE IV FORWARD)
HEIGHT: 20 FEET AFG

KIM LIGHTING WALL DIRECTOR
(WALL/BUILDING MOUNTED)
ISOLUX PATTERN "F"

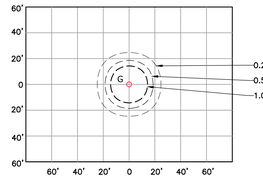

21.6W LED W/ 4000K, 70 CRI
DISTRIBUTION: TYPE 5QW (SQUARE WIDE)
HEIGHT: 9 FEET AFG

HUBBELL LIGHTING BEACON SRT1 EDGE-LIT
(CEILING MOUNTED)
ISOLUX PATTERN "G"

HUBBEL LIGHTING (BEACON)
SMALL VIPER - POLE MOUNTED, LED
FIXTURE MATERIALS: ALUMINUM
FIXTURE COLORS: PLATINUM SILVER

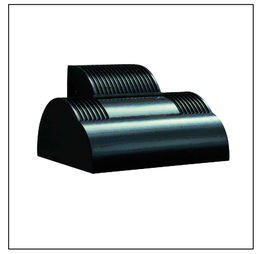

KIM LIGHTING
SMALL WALL DIRECTOR - SCONCE, LED
FIXTURE MATERIALS: ALUMINUM
FIXTURE COLORS: PLATINUM SILVER

HUBBELL LIGHTING (BEACON)
SRT1 EDGE-LIT - CEILING/CANOPY, LED
FIXTURE MATERIALS: ALUMINUM
FIXTURE COLORS: PLATINUM SILVER

LUMINAIRE SCHEDULE

SYMBOL	ARRANGEMENT	QTY	LABEL	MANUFACTURER	PRODUCT CODE	LUM. WATTS	ARRAY WATTS	LUM. LUMENS	LLF
	SINGLE	1	A	BEACON	VP-S-24L-55-4K7-2-VOLTS-AD-FINISH-MWS-BC w/ SSA-B-20'-40-A-1-S2-FINISH (POLE MOUNTED AT 20' AFG)	54.88	54.88	4631	0.950
	SINGLE	1	B	BEACON	VP-S-24L-55-4K7-3-VOLTS-AD-FINISH-MWS-BC w/ SSA-B-20'-40-A-1-S2-FINISH (POLE MOUNTED AT 20' AFG)	54.88	54.88	4128	0.950
	SINGLE	1	C	BEACON	VP-S-24L-65-4K7-4W-VOLTS-AD-FINISH-MWS w/ SSA-B-20'-40-A-1-S2-FINISH (POLE MOUNTED AT 20' AFG)	65	65	7490	0.950
	SINGLE	4	D	KIM LIGHTING	WDS-D-24L-40-4K7-2-VOLTS-FINISH-MWS (WALL MOUNTED AT 16' AFG)	42	42	4597	0.950
	SINGLE	3	E	KIM LIGHTING	WDS-D-24L-75-4K7-3-VOLTS-FINISH-MWS (WALL MOUNTED AT 16' AFG)	74	74	7859	0.950
	SINGLE	5	F	KIM LIGHTING	WDS-D-24L-75-4K7-4F-VOLTS-FINISH-MWS (WALL MOUNTED AT 20' AFG)	74	74	7866	0.950
	SINGLE	7	G	BEACON	SRT1-20-4K7-5QW-VOLTS-FINISH (CEILING MOUNTED AT 9' AFG)	21.6	21.6	2434	0.950

CALCULATION SUMMARY

LABEL	CALCTYPE	UNITS	AVG	MAX	MIN	AVG/MIN	MAX/MIN
ENTIRE PROPERTY	ILLUMINANCE	FC	1.55	6.2	0.0	N.A.	N.A.
FRONT ENTRANCE AND PARKING	ILLUMINANCE	FC	2.53	6.2	0.8	3.16	7.75
SIDE AND BACK DRIVE AISLES	ILLUMINANCE	FC	2.11	4.4	0.7	3.01	6.29

1. ALL PARKING AREAS AND APPURTENANT MANEUVERING AREAS, PASSAGEWAYS, AND DRIVEWAYS SERVING SEMIPUBLIC OFFICE, RESEARCH, COMMERCIAL AND INDUSTRIAL USES SHALL BE ILLUMINATED ADEQUATELY DURING THE HOURS BETWEEN SUNSET AND SUNRISE WHEN THE USE IS IN OPERATION. **(COMPLIES)**
2. THE BOROUGH RESERVES THE RIGHT TO REQUIRE CHANGES IN THE SITE LIGHTING FOR A PERIOD OF UP TO ONE (1) YEAR AFTER INSTALLATION.
3. HOURS OF OPERATION ARE AS FOLLOWS:
   ACCESS HOURS: 6:00AM-10:00PM (7DAYS/WEEK)
   OFFICE HOURS: 9:30AM-6:00PM (LIMITED HOURS ON SUNDAY)

DIVERSIFIED LIGHTING
55 LANE ROAD
FAIRFIELD, NJ 07004

CONTACT: MATTHEW STERNER
(908) 907-8462
MSTERNER@DIVNJ.COM

LEGEND

	ILLUMINATION CONTOUR IN FOOTCANDLES
+0.5	ILLUMINATION LEVEL IN FOOTCANDLES
	PROPOSED POLE MOUNTED FIXTURE
	PROPOSED WALL MOUNTED SCONCE
	PROPOSED CANOPY/CEILING MOUNTED FIXTURE

GRAPHIC SCALE

20 0 10 20 40 80

(IN FEET)
1" = 20'-0"

L2A LAND DESIGN / LLC
60 GRAND AVENUE
ENGLEWOOD, NJ 07631
201.227.0300 • 201.227.0001 (Fax)
www.L2Alanddesign.com
New Jersey Certificate of Authorization No. 24GA28130900

10/1/2020

Michael E. Dipple, P.E. Date

New Jersey Professional Engineer #24GE04081200

WARNING: IF THIS PLAN DOES NOT CONTAIN A RAISED IMPRESSION SEAL OVER THE PROFESSIONAL SIGNATURE IT IS NOT AN AUTHORIZED OFFICIAL COPY

APPLICANT:
PSI ATLANTIC USR NJ, LLC
530 OAK COURT DRIVE, SUITE 185
MEMPHIS, TN 38117
901.290.0184 (PHONE)

OWNER:
KRISUDEN REALTY, L.P.
A NEW JERSEY LIMITED PARTNERSHIP
7 INDUSTRIAL AVENUE
MAHWAH, NJ 07430
201.525.6292 (PHONE)

ARCHITECT:
PARKER STUDIOS
1300 MINT STREET, SUITE 110
CHARLOTTE, NC 28203
980.819.0416 (PHONE)

SURVEYOR:
LAKELAND SURVEYING, INC.
4 WEST MAIN STREET
ROCKAWAY, NJ 07866
973.625.5670 (PHONE)
973.625.4121 (FAX)

NO.	REVISION	DATE
1	REVISED PER COMPLETENESS REVIEW	5/17/2020
2	REVISED DRAINAGE PER NJDOT COMMENTS, DATED 7/21/2020	8/12/2020
3	REVISED PER PLANNING BOARD RESUBMISSION	10/1/2020

Previous Editions Obsolete

PROJECT LOCATION:
PROPOSED SELF-STORAGE FACILITY
100 N.J.S.H. ROUTE 17 NORTH
BOROUGH OF UPPER SADDLE RIVER,
BERGEN COUNTY, NJ

BLOCK: 1304; LOT: 7.01
TAX MAP: 13

DRAWING TITLE:
LIGHTING PLAN

SCALE:	REFER TO PLAN
DATE	1/17/2020
DESIGNED:	TEC
APPROVED:	MED
L2A PROJ. No.:	1901.161
DRAWING No.:	C-06

L2A LAND DESIGN, LLC — ALL RIGHTS RESERVED
THE COPYRIGHT OF THIS DOCUMENT INSTRUMENT EXPRESSLY RESERVED. FOR USE OWNER AND THE PURPOSE ORIGINALLY INTENDED, WITHOUT THE WRITTEN PERMISSION OF L2A LAND DESIGN, LLC IS PROHIBITED.

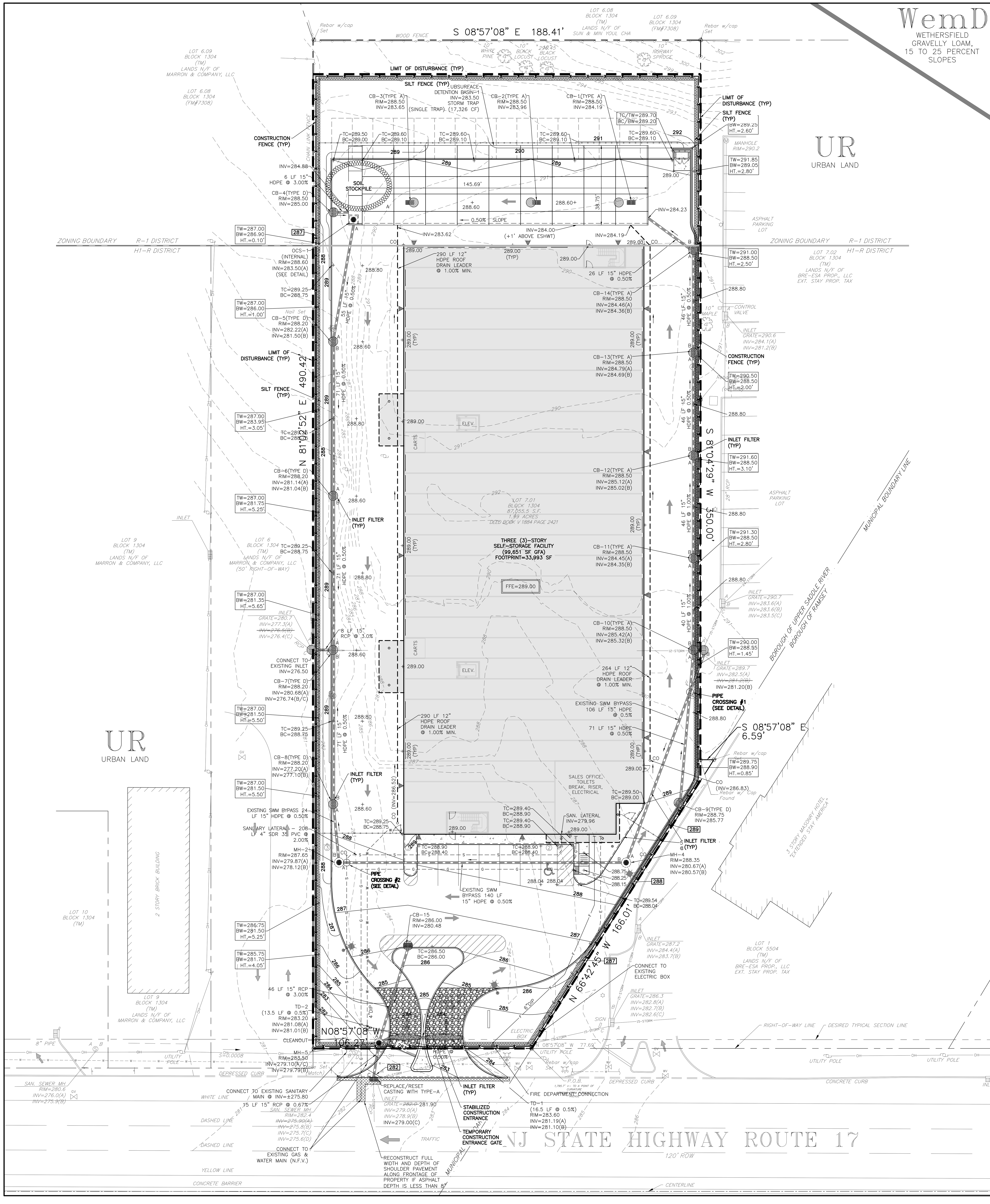

LIMIT OF DISTURBANCE = 83,700 SF (1.92 Acres)

THIS PROJECT IS EXEMPT FROM SOIL COMPACTION TESTING AND REMEDIATION AS IT IS LOCATED IN AN URBAN REDEVELOPMENT AREA

BERGEN COUNTY SCD SOIL EROSION AND SEDIMENT CONTROL NOTES:

1. ALL SOIL EROSION AND SEDIMENT CONTROL PRACTICES WILL BE INSTALLED IN ACCORDANCE WITH THE STANDARDS FOR SOIL EROSION AND SEDIMENT CONTROL IN NEW JERSEY (NJ STANDARDS), AND WILL BE INSTALLED IN PROPER SEQUENCE AND MAINTAINED UNTIL PERMANENT STABILIZATION IS ESTABLISHED.
2. ANY DISTURBED AREA THAT WILL BE LEFT EXPOSED FOR MORE THAN THIRTY (30) DAYS AND NOT SUBJECT TO CONSTRUCTION TRAFFIC SHALL IMMEDIATELY RECEIVE A TEMPORARY SEEDING AND MULCHING. IF THE SEASON PROHIBITS TEMPORARY SEEDING, THE DISTURBED AREA WILL BE MULCHED WITH UNROTTED STRAW AT A RATE OF 2 TONS PER ACRE ANCHORED BY APPROVED METHODS (I.E. PEG AND TWINE, MULCH NETTING, OR LIQUID MULCH BINDER)
3. IMMEDIATELY FOLLOWING INITIAL DISTURBANCE OR ROUGH GRADING, ALL CRITICAL AREAS SUBJECT TO EROSION WILL RECEIVE A TEMPORARY SEEDING IN COMBINATION WITH STRAW, MULCH, OR A SUITABLE EQUIVALENT, AT A RATE OF 2 TONS PER ACRE, ACCORDING TO THE NJ STANDARDS.
4. STABILIZATION SPECIFICATIONS:

A. TEMPORARY SEEDING AND MULCHING:
   - *GROUND LIMESTONE* - APPLIED UNIFORMLY ACCORDING TO SOIL TEST RECOMMENDATIONS.
   - *FERTILIZER* - APPLY 11LBS./1,000 SF OF 10-20-10 OR EQUIVALENT WITH 50% WATER INSOLUBLE NITROGEN (UNLESS A SOIL TEST INDICATES OTHERWISE) WORKED INTO THE SOIL A MINIMUM OF 4".
   - *SEED* - PERENNIAL RYEGRASS 100 LBS./ACRE (2.3 LBS./1,000 SF) OR OTHER APPROVED SEEDS; PLANT BETWEEN MARCH 1 AND MAY 15 OR BETWEEN AUGUST 15 AND OCTOBER 1.
   - *MULCH* - UNROTTED STRAW OR HAY AT A RATE OF 70 TO 90 LBS./1,000 SF APPLIED TO ACHIEVE 95% SOIL SURFACE COVERAGE. MULCH SHALL BE ANCHORED BY APPROVED METHODS (I.E. PEG AND TWINE, MULCH NETTING, OR LIQUID MULCH BINDER).

B. PERMANENT SEEDING AND MULCHING:
   - **TOPSOIL - UNIFORM APPLICATION TO A DEPTH OF 5", MINIMUM OF 4" FIRMED IN PLACE IS REQUIRED.**
   - *GROUND LIMESTONE* - APPLIED UNIFORMLY ACCORDING TO SOIL TEST RECOMMENDATIONS.
   - *FERTILIZER* - APPLY 11 LBS./1,000 SF OF 10-10-10 OR EQUIVALENT WITH 50% WATER INSOLUBLE NITROGEN (UNLESS A SOIL TEST INDICATES OTHERWISE) WORKED INTO THE SOIL A MINIMUM OF 4".
   - *SEED* - TURF TYPE TALL FESCUE (BLEND OF 3 CULTIVARS) 350 LBS./ACRE (8 LBS./1,000 SF) OR OTHER APPROVED SEEDS; PLANT BETWEEN MARCH 1 AND OCTOBER 1 (SUMMER SEEDINGS REQUIRE IRRIGATION)
   - MULCH - UNROTTED STRAW OR HAY AT A RATE OF 70 TO 90 LBS./1,000 SF APPLIED TO ACHIEVE 95% SOIL SURFACE COVERAGE. MULCH SHALL BE ANCHORED BY APPROVED METHODS (I.E. PEG AND TWINE, MULCH NETTING, OR LIQUID MULCH BINDER).

5. THE SITE SHALL AT ALL TIMES BE GRADED AND MAINTAINED SUCH THAT ALL STORMWATER RUNOFF IS DIVERTED TO SOIL EROSION AND SEDIMENT CONTROL FACILITIES.
6. SOIL EROSION AND SEDIMENT CONTROL MEASURES WILL BE INSPECTED AND MAINTAINED ON A REGULAR BASIS, INCLUDING AFTER EVERY STORM EVENT.STOCKPILES ARE NOT TO BE LOCATED WITHIN 50' OF A FLOODPLAIN, SLOPE, ROADWAY, OR DRAINAGE FACILITY. THE BASE OF ALL STOCKPILES SHALL BE CONTAINED BY A HAYBALE SEDIMENT BARRIER OR SILT FENCE.
8. A CRUSHED STONE, VEHICLE WHEEL-CLEANING BLANKET WILL BE INSTALLED WHEREVER A CONSTRUCTION ACCESS ROAD INTERSECTS ANY PAVED ROADWAY. SAID BLANKET WILL BE COMPOSED OF 1" - 2½" CRUSHED STONE, 6" THICK, WILL BE AT LEAST 30' X 100' AND SHOULD BE UNDERLAIN WITH A SUITABLE SYNTHETIC SEDIMENT FILTER FABRIC AND MAINTAINED.
9. MAXIMUM SIDE SLOPES OF ALL EXPOSED SURFACES SHALL NOT EXCEED 3:1 UNLESS OTHERWISE APPROVED BY THE DISTRICT.
10. DRIVEWAYS MUST BE STABILIZED WITH 1" - 2½" CRUSHED STONE OR SUBBASE PRIOR TO INDIVIDUAL LOT CONSTRUCTION.
11. ALL SOIL WASHED, DROPPED, SPILLED OR TRACKED OUTSIDE THE LIMIT OF DISTURBANCE OR ONTO PUBLIC RIGHT-OF-WAYS, WILL BE REMOVED IMMEDIATELY. PAVED ROADWAYS MUST BE KEPT CLEAN AT ALL TIMES.
12. CATCH BASIN INLETS WILL BE PROTECTED WITH AN INLET FILTER DESIGNED IN ACCORDANCE WITH SECTION 28-1 OF THE NJ STANDARDS.
13. STORM DRAINAGE OUTLETS WILL BE STABILIZED, AS REQUIRED, BEFORE THE DISCHARGE POINTS BECOME OPERATIONAL.
14. DEWATERING OPERATIONS MUST DISCHARGE DIRECTLY INTO A SEDIMENT CONTROL BAG OR OTHER APPROVED FILTER IN ACCORDANCE WITH SECTION 14-1 OF THE NJ STANDARDS.
15. DUST SHALL BE CONTROLLED VIA THE APPLICATION OF WATER, CALCIUM CHLORIDE OR OTHER APPROVED METHOD IN ACCORDANCE WITH SECTION 16-1 OF THE NJ STANDARDS.
16. TREES TO REMAIN AFTER CONSTRUCTION ARE TO BE PROTECTED WITH A SUITABLE FENCE INSTALLED AT THE DRIP LINE OR BEYOND IN ACCORDANCE WITH SECTION 9-1 OF THE NJ STANDARDS.
17. THE PROJECT OWNER SHALL BE RESPONSIBLE FOR ANY EROSION OR SEDIMENTATION THAT MAY OCCUR BELOW STORMWATER OUTFALLS OR OFF-SITE AS A RESULT OF CONSTRUCTION OF THE PROJECT.
18. ANY REVISION TO THE CERTIFIED SOIL EROSION AND SEDIMENT CONTROL PLAN MUST BE SUBMITTED TO THE DISTRICT FOR REVIEW AND APPROVAL PRIOR TO IMPLEMENTATION IN THE FIELD.
19. A COPY OF THE CERTIFIED SOIL EROSION AND SEDIMENT CONTROL PLAN MUST BE AVAILABLE AT THE PROJECT SITE THROUGHOUT CONSTRUCTION.
20. THE BERGEN COUNTY SOIL CONSERVATION DISTRICT MUST BE NOTIFIED, **IN WRITING**, AT LEAST 48 HOURS PRIOR TO ANY LAND DISTURBANCE: BERGEN COUNTY SCD, 700 KINDERKAMACK ROAD, SUITE 106, ORADELL, NJ 07649. TEL: 201-261-4407; FAX 201-261-7573.
21. THE BERGEN COUNTY SOIL CONSERVATION DISTRICT MAY REQUEST ADDITIONAL MEASURES TO MINIMIZE ON OR OFF-SITE EROSION PROBLEMS DURING CONSTRUCTION.
22. THE OWNER MUST OBTAIN A DISTRICT ISSUED REPORT OF COMPLIANCE PRIOR TO THE ISSUANCE OF ANY CERTIFICATE OF OCCUPANCY. **THE DISTRICT REQUIRES AT LEAST ONE WEEK'S NOTICE TO FACILITATE THE SCHEDULING OF ALL REPORT OF COMPLIANCE INSPECTIONS**. ALL SITE WORK MUST BE COMPLETED, INCLUDING TEMPORARY/PERMANENT STABILIZATION OF ALL EXPOSED AREAS, PRIOR TO THE ISSUANCE OF A REPORT OF COMPLIANCE BY THE DISTRICT.

SOIL STABILIZATION AND MAINTENANCE NOTES:

1. **THE CONTRACTOR SHALL BE RESPONSIBLE FOR MAINTAINING ALL PERMANENT SOIL EROSION AND SEDIMENT CONTROL MEASURES DURING CONSTRUCTION. SOIL EROSION AND SEDIMENT CONTROL MEASURES SHALL APPLY TO SUBSEQUENT OWNERS IF TITLE IS CONVEYED.**
2. STABILIZATION SPECIFICATIONS
   - A. TEMPORARY SEEDING AND MULCHING:
     -REFER TO BERGEN COUNTY SCD SOIL EROSION & SEDIMENT CONTROL NOTES #4(A).
   - B. PERMANENT SEEDING AND MULCHING:
     -REFER TO BERGEN COUNTY SCD SOIL EROSION & SEDIMENT CONTROL NOTES #4(B).
   - C. STABILIZATION WITH MULCH ONLY:
     APPLICABLE IN AREAS SUBJECT TO EROSION WHERE THE SEASON AND OTHER CONDITIONS MAY NOT BE SUITABLE FOR GROWING AN EROSION-RESISTANT COVER OR WHERE STABILIZATION IS NEEDED FOR A SHORT PERIOD UNTIL MORE SUITABLE PROTECTION CAN BE APPLIED.
3. SITE PREPARATION
   - C. GRADE AS NEEDED AND FEASIBLE TO PERMIT THE USE OF CONVENTIONAL EQUIPMENT FOR APPLYING AND ANCHORING MULCH. ALL GRADING SHALL BE DONE IN ACCORDANCE WITH THE NEW JERSEY STANDARDS FOR LAND GRADING.
   - D. EMPLOY NEEDED EROSION CONTROL PRACTICES SUCH AS DIVERSION GRADE STABILIZATION STRUCTURES, CHANNEL STABILIZATION MEASURES, SEDIMENT BASIN AND WATERWAYS PER THE NEW JERSEY STANDARDS.
4. PROTECTIVE MATERIALS
   - A. UNROLL SMALL-GRAIN STRAW OR SALT HAY AT 2.0 TONS TO 2.5 TONS PER ACRE AND SPREAD UNIFORMLY AT 90 LBS. TO 115 LBS./1,000 SF AND ANCHORED WITH A MULCH ANCHORING TOOL, LIQUID MULCH BINDER, OR A NETTING TIE-DOWN. OTHER SUITABLE MATERIALS MAY BE USED IF APPROVED BY THE SOIL CONSERVATION DISTRICT.
   - B. ASPHALT EMULSION IS RECOMMENDED AT THE RATE OF 600 GAL. TO 1,200 GAL./ACRE. THIS IS SUITABLE FOR A LIMITED PERIOD OF TIME WHERE TRAVEL BY PEOPLE, ANIMALS OR MACHINES IS NOT A PROBLEM.
   - C. SYNTHETIC OR ORGANIC SOIL STABILIZERS MAY BE USED UNDER SUITABLE CONDITIONS AND IN QUANTITIES AS RECOMMENDED BY THE MANUFACTURER.
   - D. WOOD-FIBER OR PAPER-FIBER MULCH AT THE RATE OF 1,500 LBS./ACRE OR ACCORDING TO THE MANUFACTURER'S REQUIREMENTS MAY BE APPLIED BY A HYDROSEEDER.
   - E. MULCH NETTING, SUCH AS PAPER JUTE, EXCELSIOR, COTTON OR PLASTIC MAY BE USED.
   - F. WOOD CHIPS APPLIED UNIFORMLY TO A MINIMUM DEPTH OF 2" MAY BE USED. WOOD CHIPS SHALL NOT BE USED ON AREAS WHERE FLOWING WATER CAN WASH THEM INTO AN INLET AND CLOG IT.
5. MULCH ANCHORING
   - A. SHALL BE ACCOMPLISHED IMMEDIATELY AFTER PLACEMENT OF HAY OR STRAW MULCH TO MINIMIZE LOSS BY WIND OR WATER. THIS SHALL BE DONE BY ONE OF THE FOLLOWING METHODS DEPENDING UPON THE SIZE OF THE AREA AND SLOPE STEEPNESS.
   - B. PEG AND TWINE: DRIVE 8" TO 10" INCH WOODEN PEGS TO WITHIN 2" TO 3" INCHES OF THE SOIL SURFACE EVERY 4' FEET IN ALL DIRECTIONS. STAKES MAY BE DRIVEN BEFORE OR AFTER APPLYING MULCH. SECURE MULCH TO SOIL SURFACE BY STRETCHING TWINE BETWEEN PEGS IN A CRISSCROSS AND A SQUARE PATTERN. SECURE TWINE AROUND EACH PEG WITH TWO OR MORE ROUND TURNS.
   - C. MULCH NETTING: STAPLE PAPER, COTTON OR PLASTIC NETTING OVER MULCH. USE A DEGRADABLE NETTING IN AREAS TO BE MOWED. NETTING IS USUALLY AVAILABLE IN ROLLS 4' FEET WIDE AND UP TO 300' FEET LONG.
   - D. CRIMPER MULCH ANCHORING COULTER TOOL: A TRACTOR DRAWN IMPLEMENT ESPECIALLY DESIGNED TO PUNCH AND ANCHOR MULCH INTO THE SOIL SURFACE. THIS PRACTICE AFFORDS MAXIMUM EROSION CONTROL BUT ITS USE IS LIMITED TO THOSE SLOPES UPON WHICH THE TRACTOR CAN OPERATE SAFELY. SOIL PENETRATION SHOULD BE ABOUT 3" TO 4" INCHES. ON SLOPING LAND, THE OPERATION SHOULD BE ON THE CONTOUR.
   - E. LIQUID-MULCH BINDERS:
     - APPLICATIONS SHOULD BE HEAVIER AT EDGES WHERE WIND CATCHES THE MULCH, IN VALLEYS AND AT CRESTS OF BANKS. REMAINDER OF AREA SHOULD BE UNIFORM IN APPEARANCE.
     - USE OF ONE OF THE FOLLOWING:
       -EMULSIFIED ASPHALT: (SS-1,CSS-1, MS-2, RS-1, RS-2, CRS-1 AND CRS-2) APPLY 0.04 GAL/SY OR 194 GAL./ACRE ON FLAT AREAS AND ON SLOPES LESS THAN 8' FEET OR MORE HIGH, USE 0.075 GAL./SY OR 363 GAL./ACRE. THESE MATERIALS MAY BE DIFFICULT TO APPLY UNIFORMLY AND WILL DISCOLOR SURFACES.
       -ORGANIC AND VEGETABLE BASED BINDERS: NATURALLY OCCURRING, POWDER BASED, HYDROPHILIC MATERIALS THAT MIXED WITH WATER FORMULATES A GEL AND WHEN APPLIED TO MULCH UNDER SATISFACTORY CURING CONDITIONS WILL FORM MEMBRANE NETWORKS OF INSOLUBLE POLYMERS. THE VEGETABLE GEL SHALL BE PHYSIOLOGICALLY HARMLESS AND NOT RESULT IN A PHYTOTOXIC EFFECT OR IMPEDE GROWTH OF TURFGRASS VEGETABLE BASED GELS SHALL BE APPLIED AT RATES AND WEATHER CONDITIONS RECOMMENDED BY THE MANUFACTURER.
       -SYNTHETIC BINDERS: HIGH POLYMER SYNTHETIC EMULSION, MISCIBLE WITH WATER WHEN DILUTED AND FOLLOWING APPLICATION TO MULCH, DRYING AND CURING SHALL NO LONGER BE SOLUBLE OR DISPERSIBLE IN WATER. IT SHALL BE APPLIED AT RATES AND WEATHER CONDITIONS RECOMMENDED BY THE MANUFACTURER AND REMAIN TACKY UNTIL GERMINATION OF GRASS.

SEQUENCE OF CONSTRUCTION

1. INSTALL PERIMETER SILT FENCE, CONSTRUCTION FENCE, INLET FILTERS, STABILIZED CONSTRUCTION ENTRANCE AND ALL OTHER SOIL EROSION & SEDIMENT CONTROL MEASURES. (1 WEEK)
2. DEMOLISH EXISTING SITE FEATURES AND OTHER STRUCTURES. THEN CLEAR AND ROUGH GRADE THE SITE FOR BUILDINGS, PARKING LOT, UNDERGROUND BASIN, AND OTHER STRUCTURES REQUIRING EXCAVATION. (2 WEEKS)
3. INSTALL AND MAINTAIN TEMPORARY SEEDING & MULCHING IN ALL DISTURBED AREAS UNTIL PERMANENT VEGETATION IS COMPLETED. (1 WEEK)
4. INSTALL UNDERGROUND BASIN AND INLET PROTECTION. (1 WEEK)
5. EXCAVATE FOR BUILDING FOUNDATIONS AND COMMENCE BUILDING CONSTRUCTION. (9 MONTHS)
6. INSTALL CURBING AND PERFORM FINAL GRADING OF THE SITE. (1 WEEK)
7. INSTALL PAVEMENT BASE COURSES. (1 WEEK)
8. INSTALL FINISHED PAVEMENT COURSES AND CONCRETE PAVEMENT. (1 WEEKS)
9. INSTALL LANDSCAPING AND PERMANENTLY STABILIZE ALL DISTURBED AREAS. (1 WEEK)
10. REMOVE ALL TEMPORARY SEDIMENT AND EROSION CONTROL STABILIZATION MEASURES. (1 WEEK)

LEGEND

(stone pattern)	STABILIZED CONSTRUCTION ENTRANCE
(circle)	INLET FILTER
—X—	TEMPORARY CONSTRUCTION FENCE
— —	LIMIT OF DISTURBANCE
(silt fence symbol)	SILT FENCE
(grey line)	SOIL DELINEATION LINE

GRAPHIC SCALE

20 0 10 20 40 80

(IN FEET)
1" = 20'-0"

L2A LAND DESIGN LLC
60 GRAND AVENUE
ENGLEWOOD. NJ 07631
201.227.0300 • 201.227.0001 (Fax)
www.L2Alanddesign.com
New Jersey Certificate of Authorization No. 24GA28130900

10/1/2020
Michael E. Dipple, P.E. Date
New Jersey Professional Engineer #24GE04081200
WARNING: *IF THIS PLAN DOES NOT CONTAIN A RAISED IMPRESSION SEAL OVER THE PROFESSIONAL SIGNATURE IT IS NOT AN AUTHORIZED OFFICIAL COPY.*

APPLICANT:
PSI ATLANTIC USR NJ, LLC
530 OAK COURT DRIVE, SUITE 185
MEMPHIS, TN 38117
901.290.0184 (PHONE)

OWNER:
KRISUJEN REALTY, L.P.
A NEW JERSEY LIMITED PARTNERSHIP
7 INDUSTRIAL AVENUE
MAHWAH, NJ 07430
201.525.6292 (PHONE)

ARCHITECT:
PARKER STUDIOS
1300 MINT STREET, SUITE 110
CHARLOTTE, NC 28203
980.819.0416 (PHONE)

SURVEYOR:
LAKELAND SURVEYING, INC.
4 WEST MAIN STREET
ROCKAWAY, NJ 07866
973.625.5670 (PHONE)
973.625.4121 (FAX)

NO.	REVISION	DATE
1	REVISED PER COMPLETENESS REVIEW	5/1/2020
2	REVISED DRAINAGE PER NJDOT COMMENTS, DATED 7/21/2020	8/12/2020
3	REVISED PER PLANNING BOARD RESUBMISSION	10/1/2020

Previous Editions Obsolete

PROJECT LOCATION:
PROPOSED SELF-STORAGE FACILITY
100 N.J.S.H. ROUTE 17 NORTH
BOROUGH OF UPPER SADDLE RIVER,
BERGEN COUNTY, NJ

BLOCK: 1304; LOT: 7.01
TAX MAP: 13

NORTH

DRAWING TITLE:
SOIL EROSION & SEDIMENT CONTROL PLAN

SCALE:	REFER TO PLAN
DATE	1/17/2020
DESIGNED:	TEC
APPROVED:	MED
L2A PROJ. No.:	1901.161
DRAWING No.:	C-07

L2A LAND DESIGN, LLC – ALL RIGHTS RESERVED
THE COPY OR REUSE OF THIS DOCUMENT, OR PORTIONS THEREOF, FOR USE OTHER THAN THE PURPOSE ORIGINALLY INTENDED, WITHOUT THE WRITTEN PERMISSION OF L2A LAND DESIGN, LLC IS PROHIBITED.

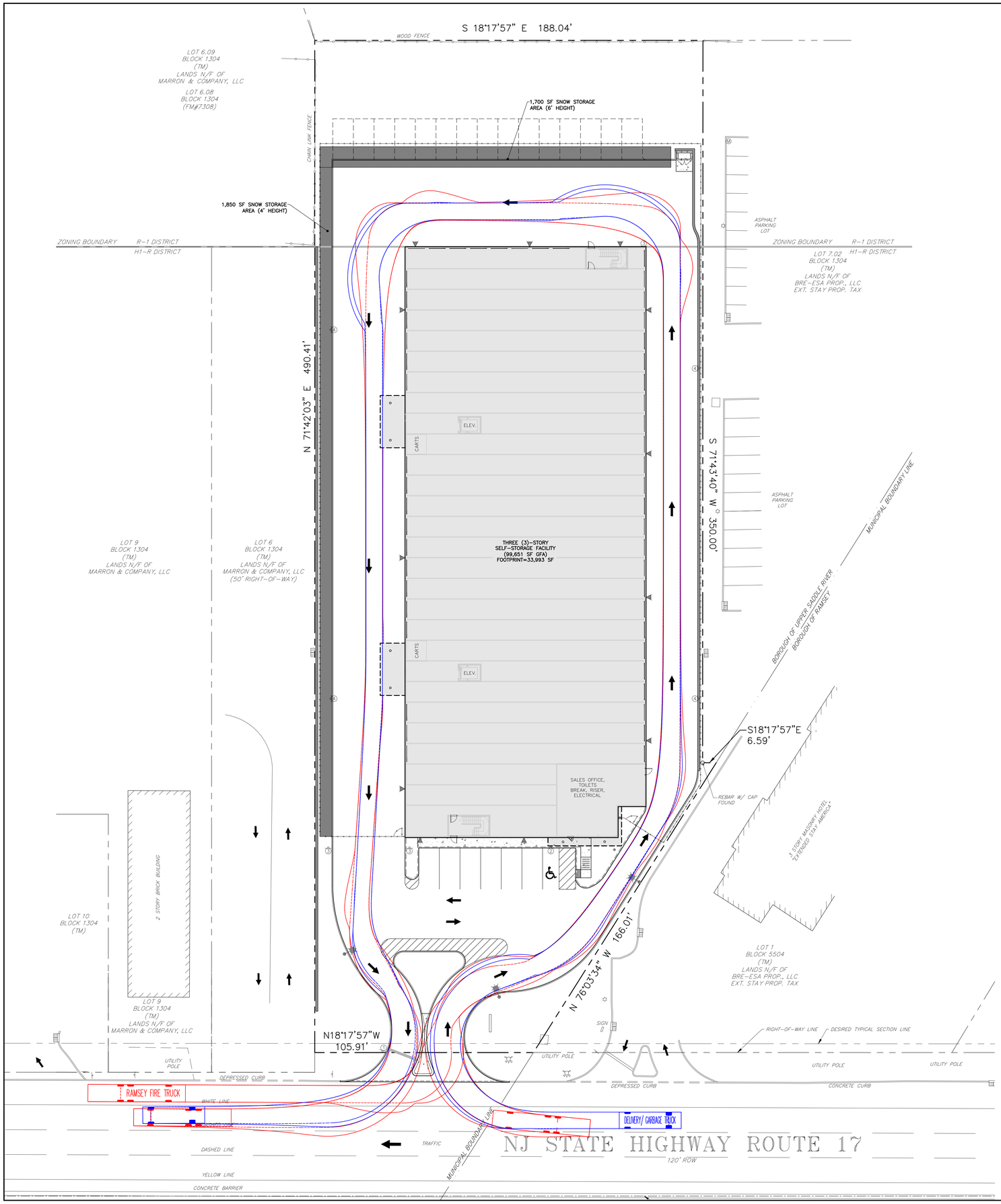

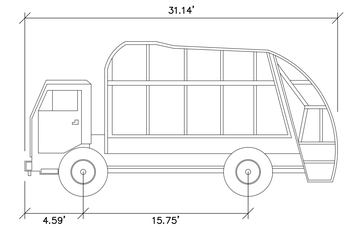

GARBAGE TRUCK
(N.T.S.)

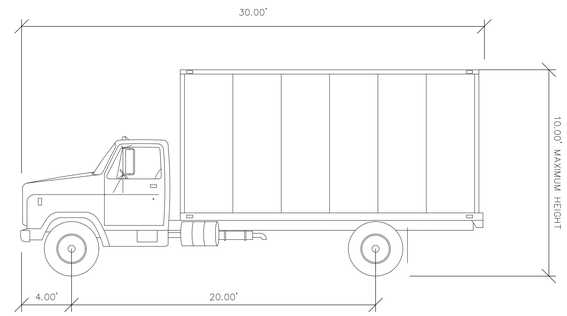

SINGLE UNIT/DELIVER (SU-30) TRUCK
(N.T.S.)

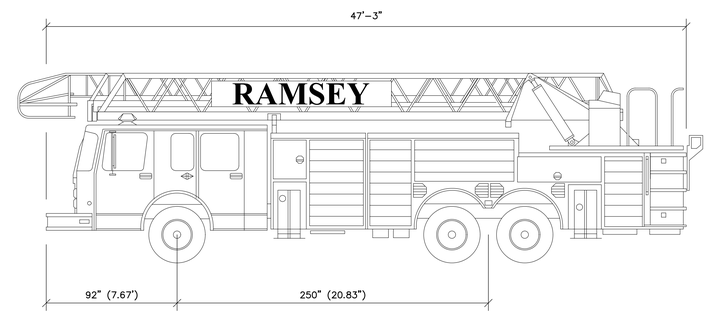

FIRE TRUCK
(N.T.S.)

SNOW STORAGE TABLE

SURFACE TYPE	QUANTITY	HEIGHT	VOLUME
SNOW PRODUCTION FROM ASPHALT, PERVIOUS & STANDARD SIDEWALK (DOES NOT INCLUDE ROOFTOP OR WALLS)	33,450 SF	6" SNOW EVENT	16,725 CF
SNOW STORAGE	3,500 SF	VARIES	17,600 CF

LEGEND

	PROPOSED SNOW STORAGE AREA
	FIRE TRUCK TURNING MOVEMENT
	GARBAGE & DELIVERY TRUCK TURNING MOVEMENT

GRAPHIC SCALE

20 0 10 20 40 80

(IN FEET)
1" = 20'-0"

L2A LAND DESIGN / LLC
60 GRAND AVENUE
ENGLEWOOD, NJ 07631
201.227.0300 • 201.227.0001 (Fax)
www.L2Alanddesign.com
New Jersey Certificate of Authorization No. 24GA28130900

10/1/2020

Michael E. Dipple, P.E. Date

New Jersey Professional Engineer #24GE04081200

WARNING: IF THIS PLAN DOES NOT CONTAIN A RAISED IMPRESSION SEAL OVER THE PROFESSIONAL SIGNATURE IT IS NOT AN AUTHORIZED OFFICIAL COPY

APPLICANT:
PSI ATLANTIC USR NJ, LLC
530 OAK COURT DRIVE, SUITE 185
MEMPHIS, TN 38117
901.290.0184 (PHONE)

OWNER:
KRISUDEN REALTY, L.P.
A NEW JERSEY LIMITED PARTNERSHIP
7 INDUSTRIAL AVENUE
MAHWAH, NJ 07430
201.525.6292 (PHONE)

ARCHITECT:
PARKER STUDIOS
1300 MINT STREET, SUITE 110
CHARLOTTE, NC 28203
980.819.0416 (PHONE)

SURVEYOR:
LAKELAND SURVEYING, INC.
4 WEST MAIN STREET
ROCKAWAY, NJ 07866
973.625.5670 (PHONE)
973.625.4121 (FAX)

REVISION

NO.	REVISION	DATE
1	REVISED PER COMPLETENESS REVIEW	5/17/2020
2	REVISED DRAINAGE PER NJDOT COMMENTS, DATED 7/21/2020	8/17/2020
3	REVISED PER PLANNING BOARD RESUBMISSION	10/1/2020

Previous Editions Obsolete

PROJECT LOCATION:
PROPOSED SELF-STORAGE FACILITY
100 N.J.S.H. ROUTE 17 NORTH
BOROUGH OF UPPER SADDLE RIVER,
BERGEN COUNTY, NJ

BLOCK: 1304; LOT: 7.01
TAX MAP: 13

DRAWING TITLE:
TRUCK TURNING & SNOW STORAGE PLAN

SCALE:	REFER TO PLAN
DATE:	1/17/2020
DESIGNED:	TEC
APPROVED:	MED
L2A PROJ. No.:	1901.161
DRAWING No.:	C-08

L2A LAND DESIGN, LLC — ALL RIGHTS RESERVED
THE COPY OR REUSE OF THIS DOCUMENT, OR PORTIONS THEREOF, FOR USE OTHER THAN IN CONNECTION WITH THE PROJECT, WITHOUT WRITTEN PERMISSION OF L2A LAND DESIGN, LLC IS PROHIBITED.

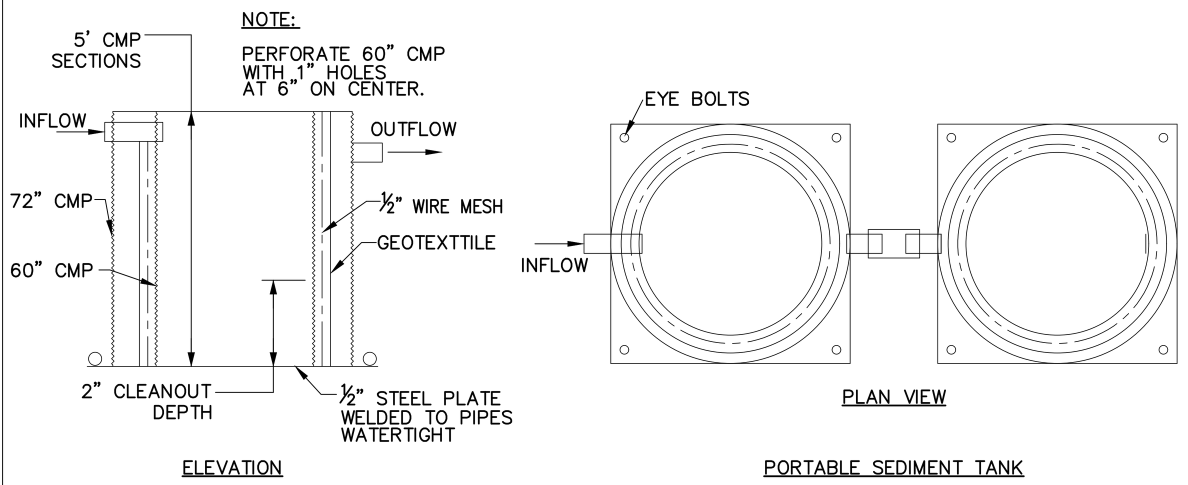

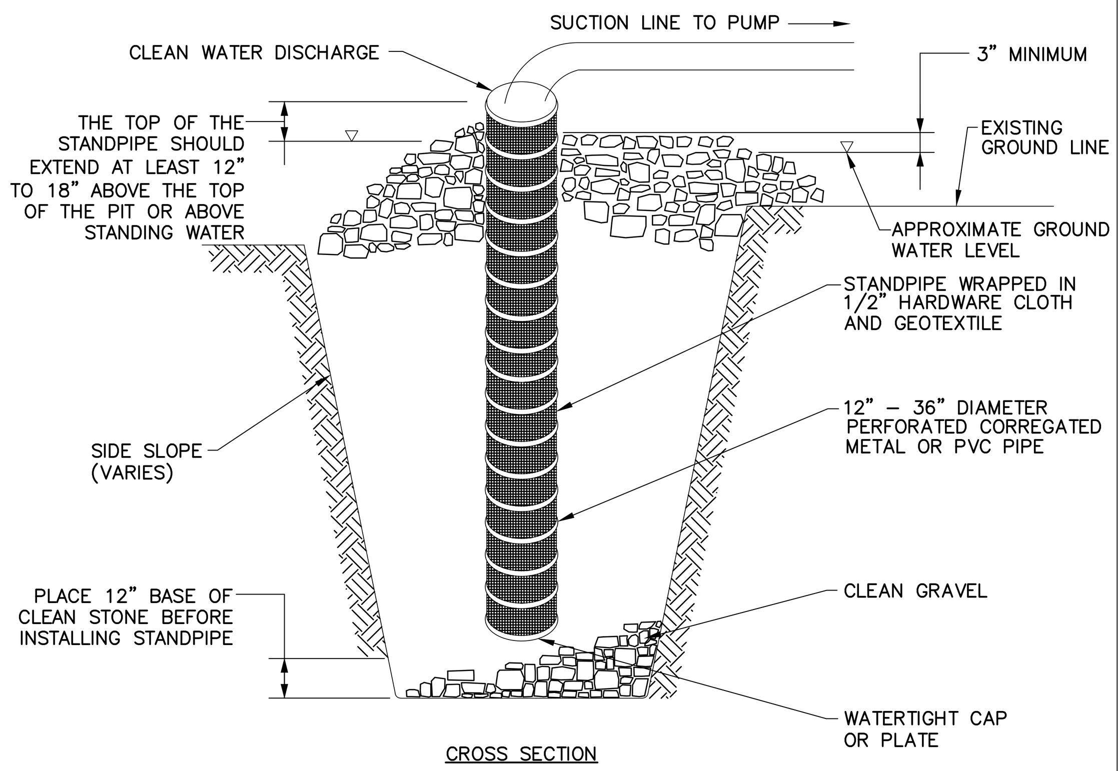

SUMP PIT

NOTES:

1. PIT DIMENSIONS ARE VARIABLE WITH THE MINIMUM DIAMETER BEING 2 TIMES THE STANDPIPE DIAMETER.
2. THE STANDPIPE SHOULD BE CONSTRUCTED BY PERFORATING A 12" TO 24" DIAMETER CORRUGATED OR PVC PIPE. THEN WRAPPING WITH ½" HARDWARE CLOTH AND GEOTEXTILE FABRIC. THE PERFORATIONS SHALL BE ½" x 6" SLITS OR 1" DIAMETER HOLES.
3. A BASE OF FILTER MATERIAL CONSISTING OF CLEAN GRAVEL OR ASTM C33 STONE SHOULD BE PLACED IN THE PIT TO A DEPTH OF 12". AFTER INSTALLING THE STANDPIPE, THE PIT SURROUNDING THE STANDPIPE SHOULD THEN BE BACKFILLED WITH THE SAME FILTER MATERIAL.
4. THE STANDPIPE SHOULD EXTEND 12" TO 18" ABOVE THE LIP OF THE PIT OR THE RISER CREST ELEVATION (BASIN DEWATERING ONLY) AND THE FILTER MATERIAL SHOULD EXTEND 3" MINIMUM ABOVE THE ANTICIPATED STANDING WATER ELEVATION.

DEWATERING

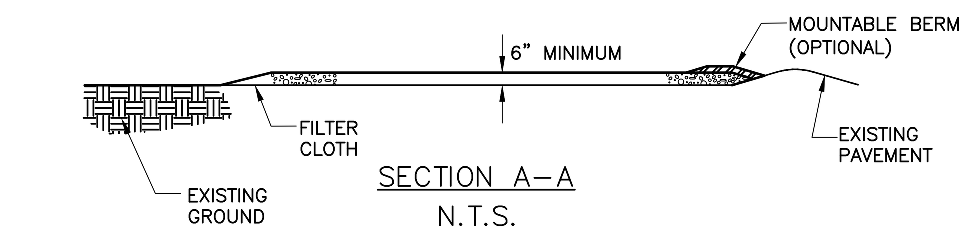

SECTION A–A
N.T.S.

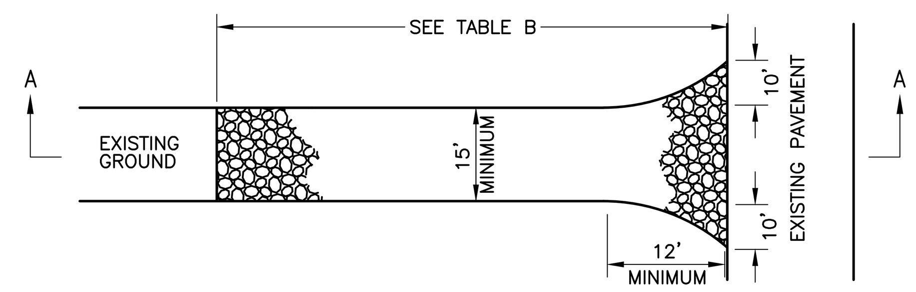

TABLE B

PERCENT SLOPE OF ROADWAY	LENGTH OF STONE REQUIRED	
	COURSE GRAINED SOILS	FINE GRAINED SOILS
0 TO 2%	50 FEET	100 FEET
2 TO 5%	100 FEET	200 FEET
>5%	ENTIRE SURFACE STABILIZED WITH FABC BASE COURSE [1]	

[1]AS PRESCRIBED BY LOCAL ORDINANCE OR OTHER GOVERNING AUTHORITY.

NOTES:

1. USE ASTM C–33 SIZE NO. 2 (2–1/2 TO 1–1/2 IN) OR NO. 3 (2 TO 1 IN). USE CLEAN CRUSHED ANGULAR STONE. CRUSHED CONCRETE OF SIMILAR SIZE MAY BE SUBSTITUTED BUT WILL REQUIRE MORE FEQUENT UPGRADING AND MAINTENANCE.
2. THICKNESS – NOT LESS THAN SIX (6) INCHES.
3. WIDTH – 15 FOOT MINIMUM, BUT NOT LESS THAN THE FULL WIDTH AT POINTS WHERE INGRESS OR EGRESS OCCURS. 24 FOOT MINIMUM IF SINGLE ENTRANCE TO SITE. FILTER CLOTH – TO BE PLACED OVER THE ENTIRE AREA PRIOR TO PLACING OF STONE.
4. LENGTH – 50 FEET MINIMUM WHERE THE SOILS ARE COURSE–GRAINED (SAND OR GRAVELS) OR 100 FEET MINIMUM WHERE SOILS ARE FINE–GRAINED (CLAYS OF SILTS), EXCEPT WHERE THE TRAVELED LENGTH IS LESWS THAN 50 OR 100 FEET RESPECTIVELY. (SEE TABLE B)
5. SURFACE WATER – ALL SURFACE WATER FLOWING OR DIVERTED TOWARD CONSTRUCTION ENTRANCES SHALL BE PIPED ACROSS THE ENTRANCE. IF PIPING IS IMPRACTICAL, A MOUNTABLE BERM WITH 5:1 SLOPES WILL BE PERMITTED.
6. MAINTENANCE – THE ENTRANCE SHALL BE MAINTAINED IN A CONDITION WHICH WILL PREVENT TRACKING OF FLOWING OF SEDIMENT ONTO PUBLIC RIGHTS–OF–WAY. THIS MAY REQUIRE PERIODIC TOP DRESSING WITH ADDITIONAL STONE AS CONDITIONS DEMAND AND REPAIR AND/OR CLEANOUT OF ANY MEASURE USED TO TRAP SEDIMENT. ALL SEDIMENT SPILLED, DROPPED, WASHED OR TRACKED ONTO PUBLIC RIGHTS–OF–WAY SHALL BE REMOVED IMMEDIATELY.
7. WASHING – WHEELS SHALL BE CLEANED TO REMOVE SEDIMENT PRIOR TO ENTRANCE ONTO PUBLIC RIGHTS–OF–WAY. WHEN WASHING IS REQUIRED, IT SHALL BE DONE ON AN AREA STABILIZED WITH STONE AND WHICH DRAINS INTO AN APPROVED SEDIMENT TRAPPING DEVICE.
8. PERIODIC INSPECTION AND NEEDED MAINTENANCE SHALL BE PROVIDED AFTER EACH RAIN EVENT.
9. WHERE THE SLOPE OF THE ACCESS ROAD EXCEEDS 5%, A STABILIZED LOOSE COURSE OF FINE FINE AGGREGATE BITUMINOUS CONCRETE (FABC) SHALL BE INSTALLED. THE TYPE AND THICKNESS OF THE FABC AND USE OF A COURSE GRADED AGGREGATE SUB–BASE SHALL BE PERSCRIBED BY LOCAL MUNICIPAL ORDINANCE OR GOVERNING AUTHORITY

STABILIZED CONSTRUCTION ENTRANCE

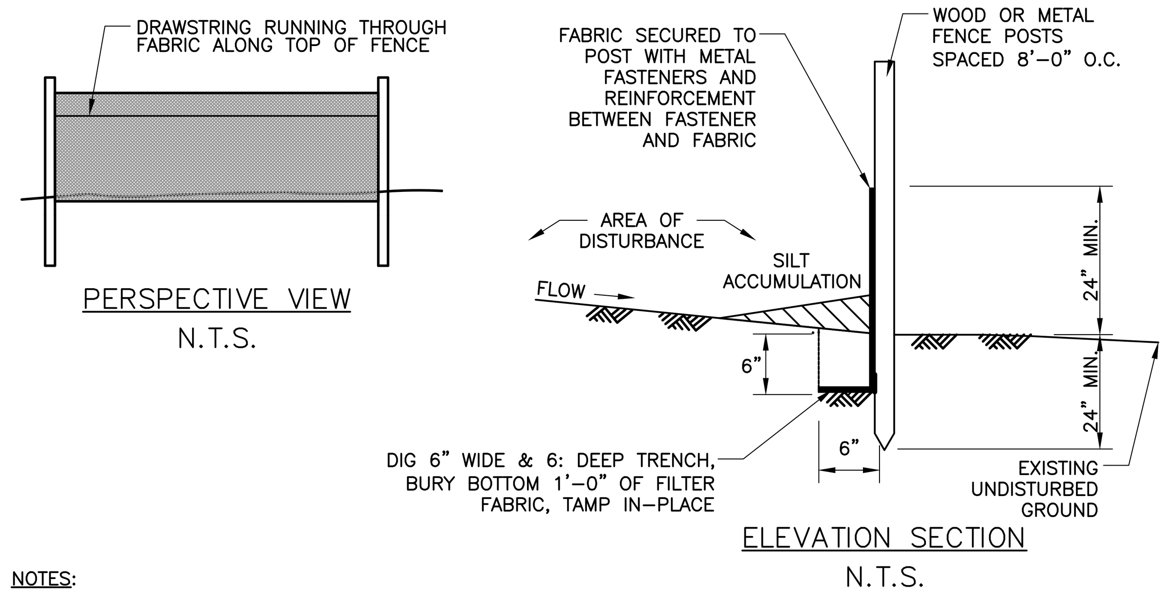

NOTES:

1. PLACE SILT FENCE AT LOCATIONS AS SHOWN ON THE SOIL EROSION AND SEDIMENT CONTROL PLANS.
2. THE SLOPE OF THE LAND FOR AT LEAST THIRTY (30'–0") FEET ADJACENT TO ANY SILT FENCE SHALL NOT EXCEED FIVE (5%) PERCENT.
3. SILT FENCE SHALL BE INSTALLED SO WATER CANNOT BYPASS AROUND THE SIDES OF THE FENCE.
4. INSPECTION SHALL BE FREQUENT AND REPAIR OR REPLACEMENT SHALL BE MADE AS PROMPTLY AS POSSIBLE.
5. SILT FENCE SHALL REMAIN IN PLACE FOR THE DURATION OF THE PROJECT UNLESS OTHERWISE INSTRUCTED BY THE SOIL CONSERVATION DISTRICT.

SILT FENCE

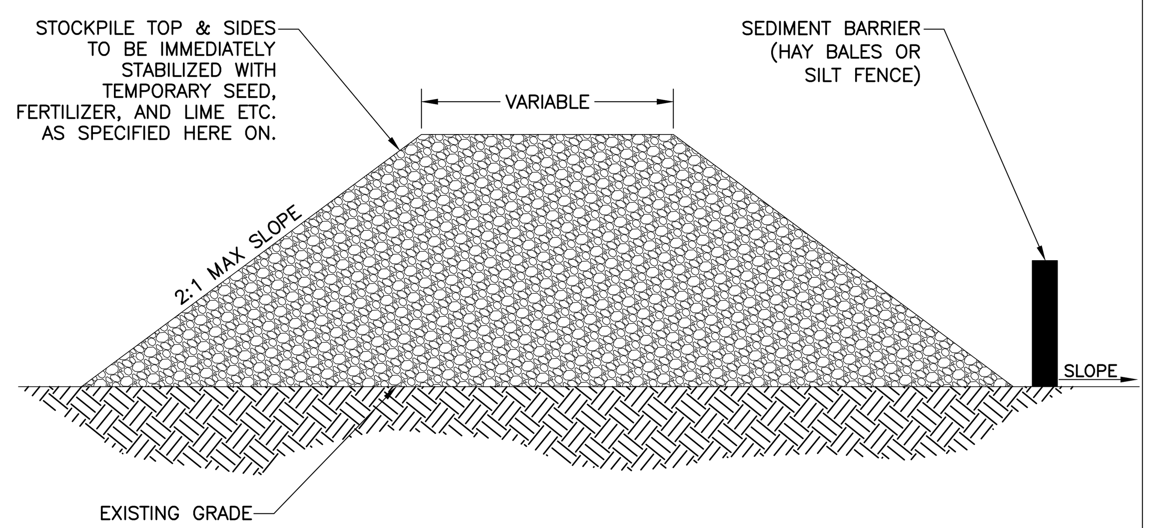

TYPICAL STOCKPILE SECTION

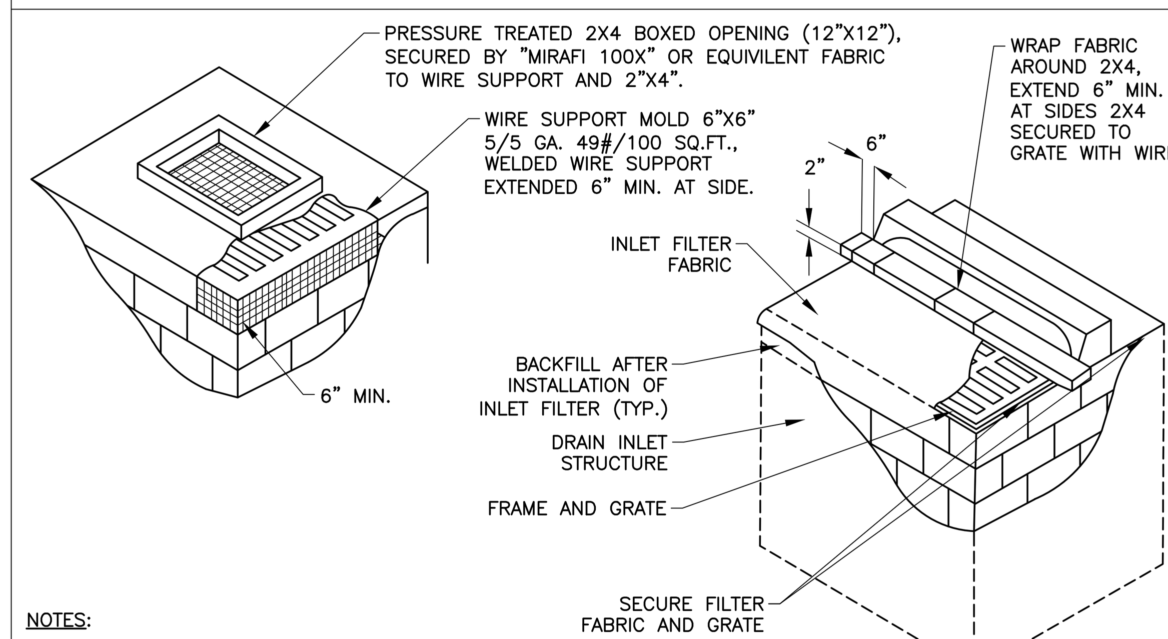

NOTES:

1. CONTRACTOR SHALL CLEAN INLET FILTER AFTER EVERY STORM EVENT.
2. CONTRACTOR SHALL REMOVE FABRIC AND MESH JUST PRIOR TO PAVING.
3. IF BOTTOM OF ROADWAY BOX IS BELOW TOP OF GRATE, CONSTRUCT OPENINGS IN INLET WALL TO ALLOW WATER TO FLOW IN. COVER OPENINGS WITH WELDED WIRE SUPPORT AND FILTER FABRIC.
4. THE PROTECTION DEVICE SHALL BE DESIGNED TO CAPTURE OR FILTER RUNOFF FROM THE 1–YEAR, 24–HOUR STORM EVENT AND SHALL SAFELY CONVEY HIGHER FLOWS DIRECTLY INTO THE STORM SEWER SYSTEM.

INLET FILTER

DUST CONTROL NOTES:

THE FOLLOWING METHODS SHOULD BE CONSIDERED FOR CONTROLLING DUST:

MULCHES - SEE STANDARD FOR STABILIZATION WITH MULCHES ONLY (Pg. 5-1)

VEGETATIVE COVER - SEE STANDARD FOR TEMPORARY VEGETATIVE COVER (Pg. 7-1), PERMANENT VEGETATIVE COVER FOR SOIL STABILIZATION (Pg. 4-1), AND PERMANENT STABILIZATION WITH SOD (Pg. 6-1)

SPRAY-ON ADHESIVES - ON MINERAL SOILS (NOT EFFECTIVE ON MUCK SOILS). KEEP TRAFFIC OFF THESE AREAS.

TABLE 16-1: DUST CONTROL MATERIALS

MATERIAL	WATER DILUTION	TYPE OF NOZZLE	APPLY GALLONS/ACRE
ANIONIC ASPHALT EMULSION	7:1	COARSE SPRAY	1200
LATEX EMULSION	12.5:1	FINE SPRAY	235
RESIN IN WATER	4:1	FINE SPRAY	300
POLYACRYLAMIDE (PAM) - SPRAY ON POLYACRYLAMIDE (PAM) - DRY SPRAY	APPLY ACCORDING TO MANUFACTURER'S INSTRUCTIONS. MAY ALSO BE USED AS AN ADDITIVE TO SEDIMENT BASINS TO FLOCCULATE AND PRECIPITATE SUSPENDED COLLOIDS. SEE SEDIMENT BASIN STANDARDS (Pg. 26-1)		
ACIDULATED SOY BEAN SOAP STICK	NONE	COARSE SPRAY	1200

TILLAGE - TO ROUGHEN SURFACE AND BRING CLODS TO THE SURFACE. THIS IS A TEMPORARY EMERGENCY MEASURE WHICH SHOULD BE USED BEFORE SOIL BLOWING STARTS. BEGIN PLOWING ON WINDWARD SIDE OF SITE. CHISEL-TYPE PLOWS SPACED ABOUT 12 INCHES APART, AND SPRING-TOOTHED HARROWS ARE EXAMPLES OF EQUIPMENT WHICH MAY PRODUCE THE DESIRED EFFECT.

SPRINKLING - SITE IS SPRINKLED UNTIL THE SURFACE IS WET.

BARRIERS - SOLID BOARD FENCES, SNOW FENCES, BURLAP FENCES, CRATE WALLS, BALES OF HAY, AND SIMILAR MATERIAL CAN BE USED TO CONTROL AIR CURRENTS AND SOIL BLOWING.

CALCIUM CHLORIDE - SHALL BE IN THE FORM OF LOOSE, DRY GRANULATES OF FLAKES FINE ENOUGH TO FEED THROUGH COMMONLY USED SPREADERS AT A RATE THAT WILL KEEP SURFACE MOIST BUT NOT CAUSE POLLUTION OR PLANT DAMAGE. IF USED ON STEEPER SLOPES, THEN USE OTHER PRACTICES TO PREVENT WASHING INTO STREAMS OR ACCUMULATION AROUND PLANTS.

STONE - COVER SURFACE WITH CRUSHED STONE OR COARSE GRAVEL.

DUST CONTROL NOTES

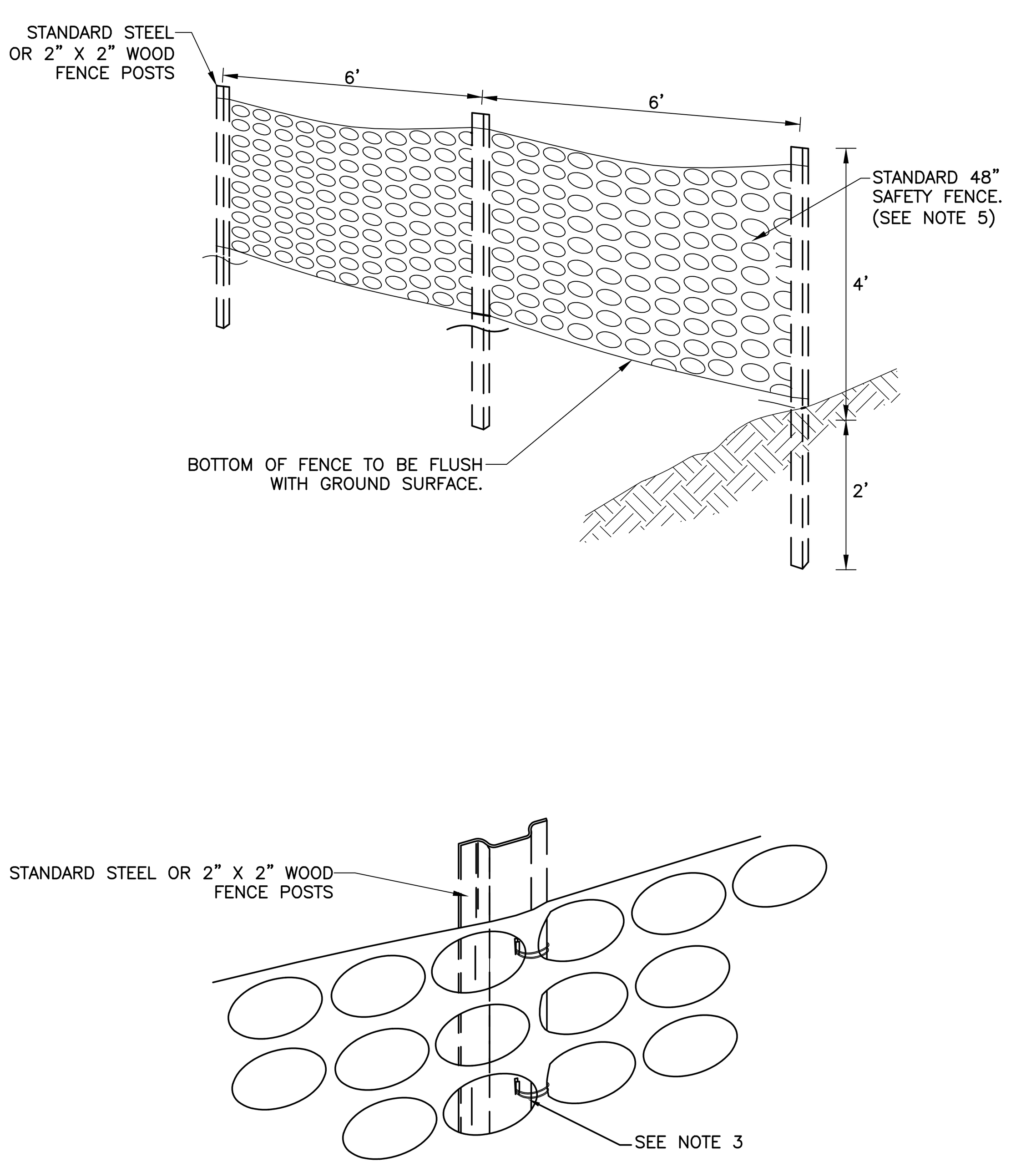

NOTES:

1. SPACE SUPPORT FENCE POSTS AT 6 FOOT INTERVALS.
2. DRIVE SUPPORT POST 2 FEET INTO GROUND.
3. FIRMLY FASTEN FENCE MATERIAL IN PLACE BY WIRING TO FENCE POST WHILE MAINTAINING TENSION ACROSS FULL HEIGHT OF FENCE. WIRING SHALL BE DONE IN A MANNER THAT WILL PREVENT SAGGING OF FENCE MATERIAL.
4. PROVIDE PERIODIC INSPECTION AND MAINTENANCE OF FENCE INCLUDING REPAIRS AS NECESSARY AND REQUIRED.
5. PLASTIC FENCE SHALL BE INTERNATIONAL ORANGE COLOR.

CONSTRUCTION FENCE

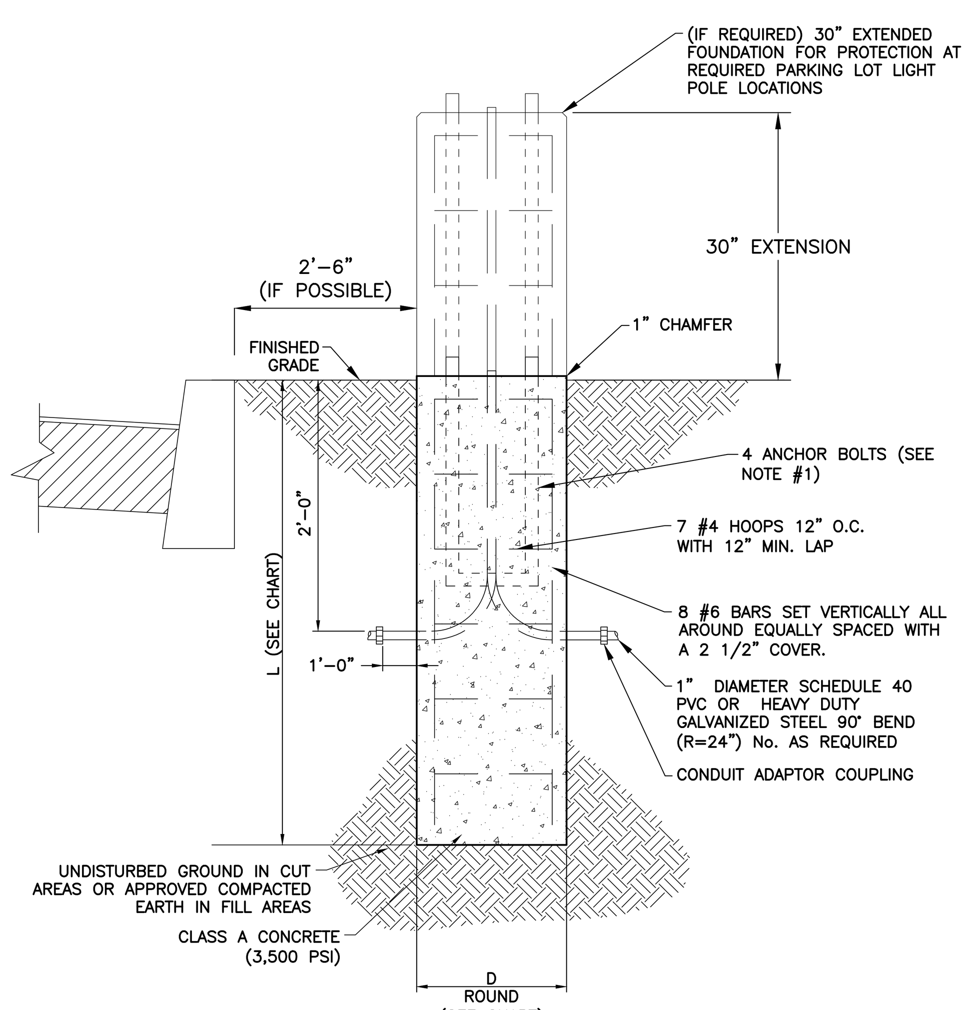

POLE HEIGHT	D	L
0 FT – 16 FT	24"	3'–8"
16 FT – 30 FT	24"	5'–0"

NOTES:

1. IT SHALL BE THE CONTRACTOR'S RESPONSIBILITY TO CHECK AND VERIFY ALL ANCHOR BOLT DIMENSIONS (SIZE, BOLT CIRCLE, ETC.) WITH THE CONTRACTOR WHO WILL BE INSTALLING THE LIGHTING STANDARD PRIOR TO INSTALLATION OF THE FOUNDATIONS.
2. CHAMFER EXPOSED EDGES OF ALL FOUNDATIONS.
3. PROVIDE INSULATED GROUNDING BUSHING ON EXPOSED ENDS (IN BASE OF POLE) OF ALL GALVANIZED STEEL BENDS.

LIGHT POLE FOUNDATION

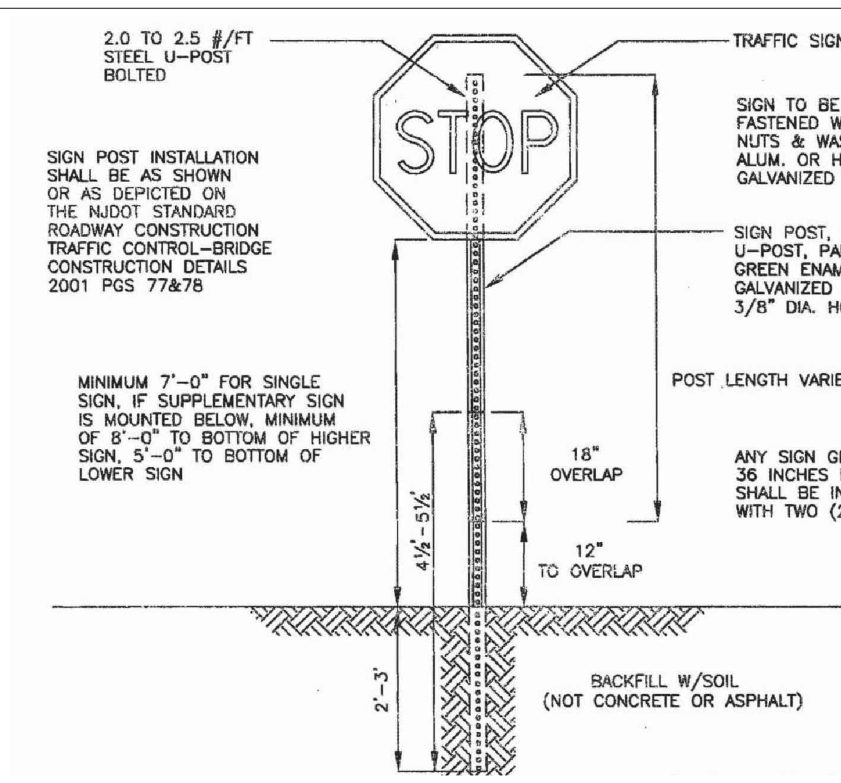

COUNTY BREAKAWAY SIGN

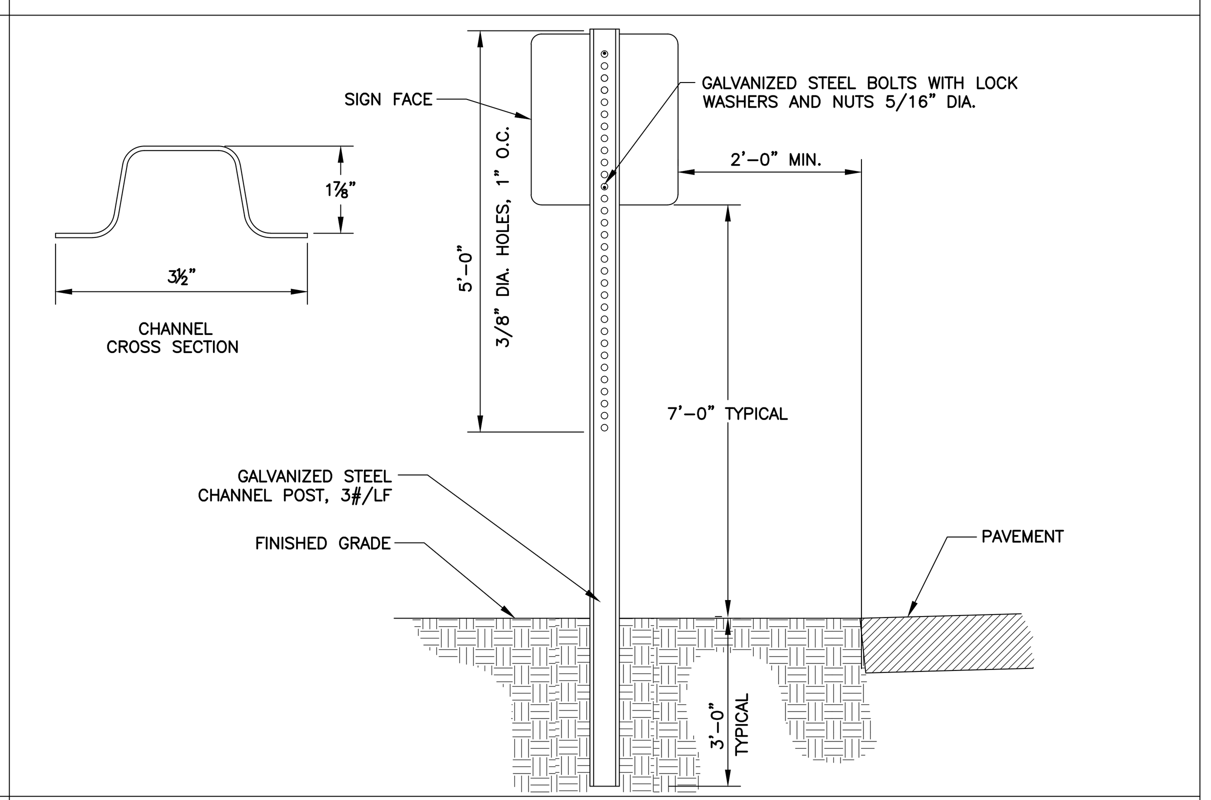

TRAFFIC SIGN POST WITH STEEL CHANNEL

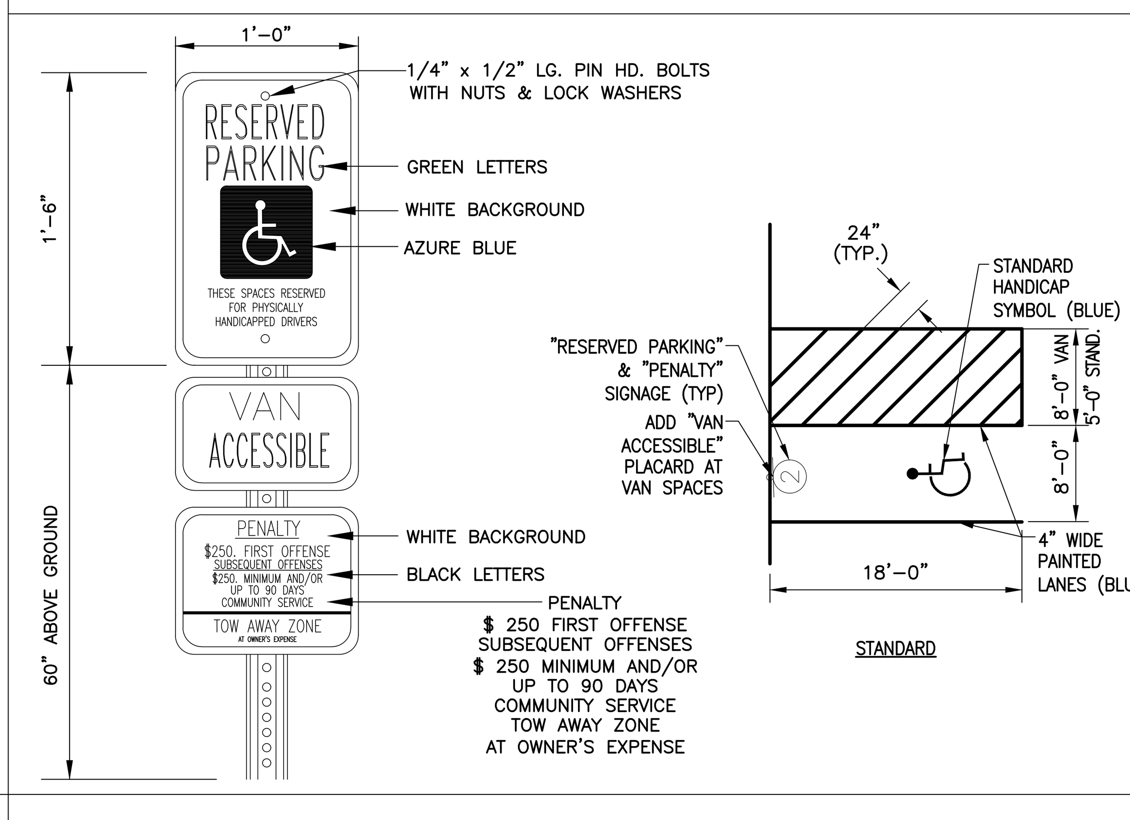

HANDICAP STRIPING & SIGNAGE

#	SIGN CONTENT	MUTCD STANDARD #	SIZE	COLOR	MOUNTING
1	STOP	R1–1	30" x 30"	RED BACKGROUND WHITE CHARACTERS	POLE MOUNTED
2	RESERVED PARKING VAN ACCESSIBLE PENALTY	R7–8 R7–8a R7–8a (MOD)	12"x18" 12"x6" 18"x18"	WHITE BACKGROUND BLUE AND BLACK CHARACTERS	POLE MOUNTED
3	DO NOT ENTER	R5–1	30"X30"	RED BACKGROUND WHITE CHARACTERS	POLE MOUNTED/ WALL MOUNTED
4	ONE WAY	R6–1L	36"X12"	WHITE ARROW BLACK BACKGROUND & CHARACTERS	POLE MOUNTED

DIRECTIONAL SIGNAGE TABLE

L2A
LAND DESIGN LLC
60 GRAND AVENUE
ENGLEWOOD. NJ 07631
201.227.0300 • 201.227.0001 (Fax)
www.L2Alanddesign.com
New Jersey Certificate of Authorization No. 24GA28130900

10/1/2020
Michael E. Dipple, P.E. Date
New Jersey Professional Engineer #24GE04081200

WARNING: IF THIS PLAN DOES NOT CONTAIN A RAISED IMPRESSION SEAL OVER THE PROFESSIONAL SIGNATURE IT IS NOT AN AUTHORIZED OFFICIAL COPY.

APPLICANT:
PSI ATLANTIC USR NJ, LLC
530 OAK COURT DRIVE, SUITE 185
MEMPHIS, TN 38117
901.290.0184 (PHONE)

OWNER:
KRISUJEN REALTY, L.P.
A NEW JERSEY LIMITED PARTNERSHIP
7 INDUSTRIAL AVENUE
MAHWAH, NJ 07430
201.525.6292 (PHONE)

ARCHITECT:
PARKER STUDIOS
1300 MINT STREET, SUITE 110
CHARLOTTE, NC 28203
980.819.0416 (PHONE)

SURVEYOR:
LAKELAND SURVEYING, INC.
4 WEST MAIN STREET
ROCKAWAY, NJ 07866
973.625.5670 (PHONE)
973.625.4121 (FAX)

NO.	REVISION	DATE
1	REVISED PER COMPLETENESS REVIEW	5/1/2020
2	REVISED DRAINAGE PER NJDOT COMMENTS, DATED 7/21/2020	8/12/2020
3	REVISED PER PLANNING BOARD RESUBMISSION	10/1/2020

Previous Editions Obsolete

PROJECT LOCATION:
PROPOSED SELF-STORAGE FACILITY
100 N.J.S.H. ROUTE 17 NORTH
BOROUGH OF UPPER SADDLE RIVER,
BERGEN COUNTY, NJ

BLOCK: 1304; LOT: 7.01
TAX MAP: 13

DRAWING TITLE:
DETAILS - 1

SCALE:	REFER TO PLAN
DATE	1/17/2020
DESIGNED:	TEC
APPROVED:	MED
L2A PROJ. No.:	1901.161
DRAWING No.:	C-09

L2A LAND DESIGN, LLC – ALL RIGHTS RESERVED
THE COPY OR REUSE OF THIS DOCUMENT, OR PORTIONS THEREOF, FOR USE OTHER THAN THE PURPOSE ORIGINALLY INTENDED, WITHOUT THE WRITTEN PERMISSION OF L2A LAND DESIGN, LLC IS PROHIBITED.

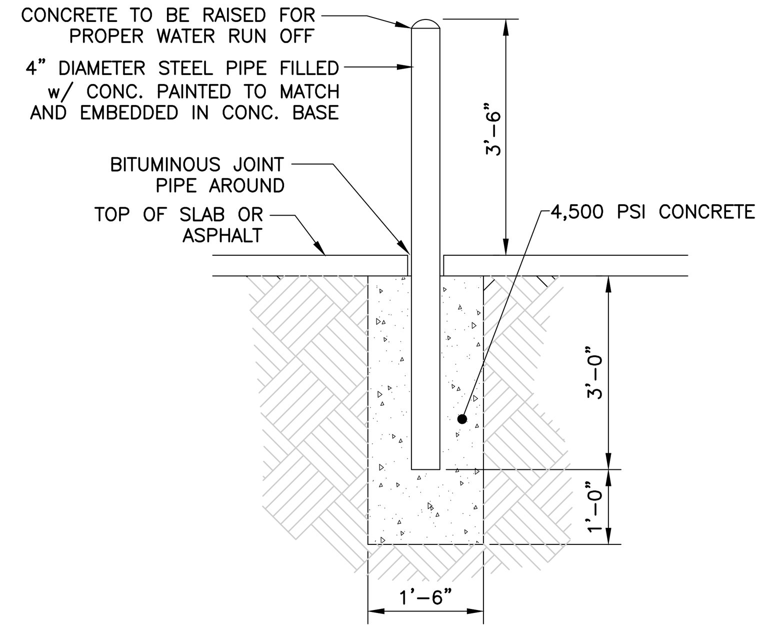

CONCRETE BOLLARD

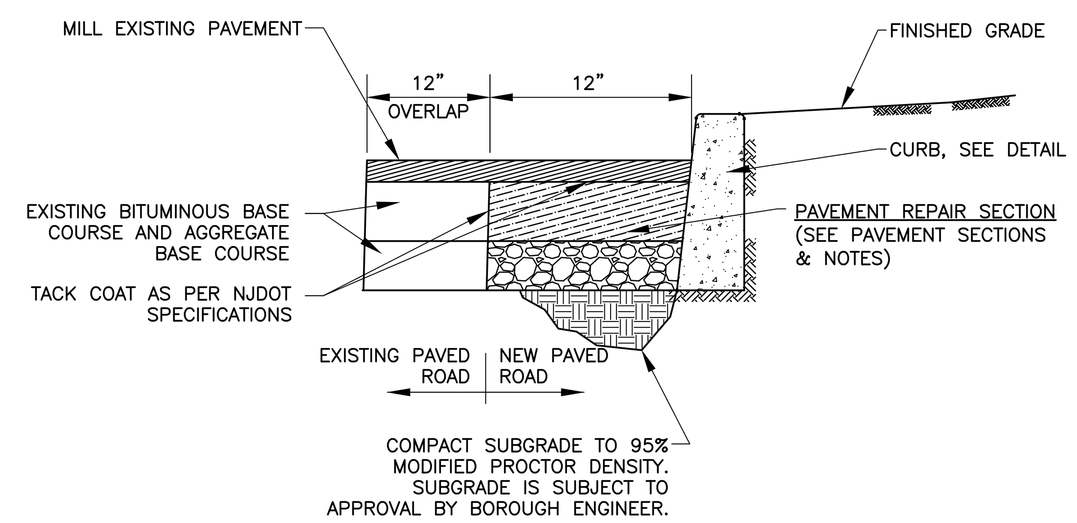

CONCRETE CURB & PAVEMENT INSTALLATION

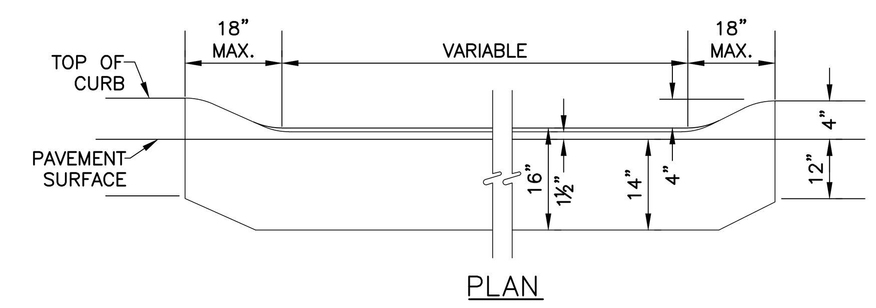

METHOD OF DEPRESSING CURB AT DRIVEWAYS

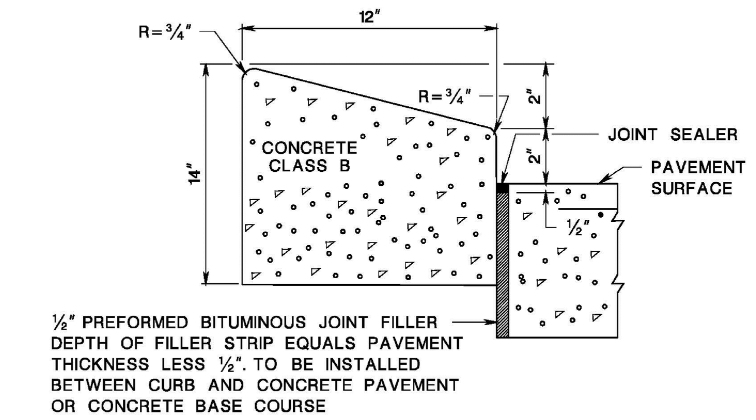

NOTES:
1. 1/2 INCH PREFORMED EXPANSION JOINT FILLER, BITUMINOUS TYPE, TO BE INSTALLED BETWEEN THE CURB AND CONCRETE PAVEMENT OR CONCRETE BASE COURSE.
2. TRANSVERSE JOINTS 1/2 INCH WIDE SHALL BE INSTALLED IN THE CURB 20 FEET APART AND SHALL BE FILLED WITH PREFORMED BITUMINOUS-IMPREGNATED FIBER JOINT RECESSED 1/4 INCH IN FROM FRONT FACE AND TOP OF CURB.
3. EXPANSION JOINTS THRU AND ADJACENT TO THE CURB SHAL BE INCLUDED IN THE UNIT PRICE FOR CURB.

12" X 13" CONCRETE/ WHITE CONCRETE SLOPING CURB

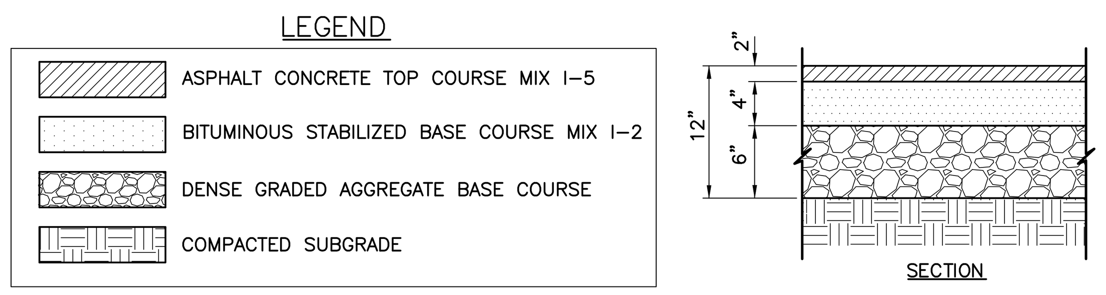

NOTES:

1. THE CONTRACTOR SHALL INSTALL ALL PAVEMENTS AS SPECIFIED IN THE LOCATIONS AND TO THE GRADES AS SHOWN ON THE DRAWINGS AND/OR AS DIRECTED BY THE OWNER'S FIELD REPRESENTATIVE. MATERIALS, METHODS OF CONSTRUCTION AND TYPE AND THICKNESS OF PAVEMENT COURSES SHALL BE AS SHOWN ON THE DRAWINGS AND AS SPECIFIED HEREIN.
2. PRIOR TO THE START OF PAVING OPERATIONS, THE SUBGRADE SURFACE SHALL BE PREPARED BY FILLING IN WHEEL RUTS, EROSIONS, AND ALL OTHER GROUND DISTURBANCES REGARDLESS OF CAUSE. THE GROUND SURFACE SHALL BE FINE GRADED SO THAT AFTER COMPACTION THE SUBGRADE SURFACE SHALL BE AT THE PROPER ELEVATION (+/- 0.05') TO ACCOMMODATE THE PAVEMENT STRUCTURE.
3. THE CONTRACTOR SHALL BE RESPONSIBLE FOR REMOVING AND REPLACING ALL SOFT, YIELDING OR UNSUITABLE SOIL MATERIAL AND REPLACING THE UNSUITABLE MATERIAL AS SPECIFIED IN THE SOILS REPORT. ALL EXCAVATED OR FILLED AREAS SHALL BE COMPACTED TO 95% OF MODIFIED PROCTOR DENSITY PER ASTM TEST D-1557. MOISTURE CONTENT AT TIME OF PLACEMENT SHALL NOT EXCEED 2% ABOVE NOR 3% BELOW OPTIMUM.
4. CONTRACTOR SHALL REFER TO THE SOILS REPORT FOR GEOTECHNICAL RECOMMENDATIONS.
5. THE CONTRACTOR SHALL REPLACE DISTURBED PAVEMENT TO THE LINES AND GRADES SHOWN ON THE DRAWINGS OR SPECIFIED HEREIN.
6. ALL ASPHALT CONSTRUCTION PAVING JOINTS SHALL BE TACK COATED JUST PRIOR TO THE CONTINUATION OF PAVING OPERATIONS.
7. LIMITS OF FULL DEPTH PAVEMENT, MILLING, AND LEVELING ARE APPROXIMATE.

PAVEMENT SECTIONS (SITE)

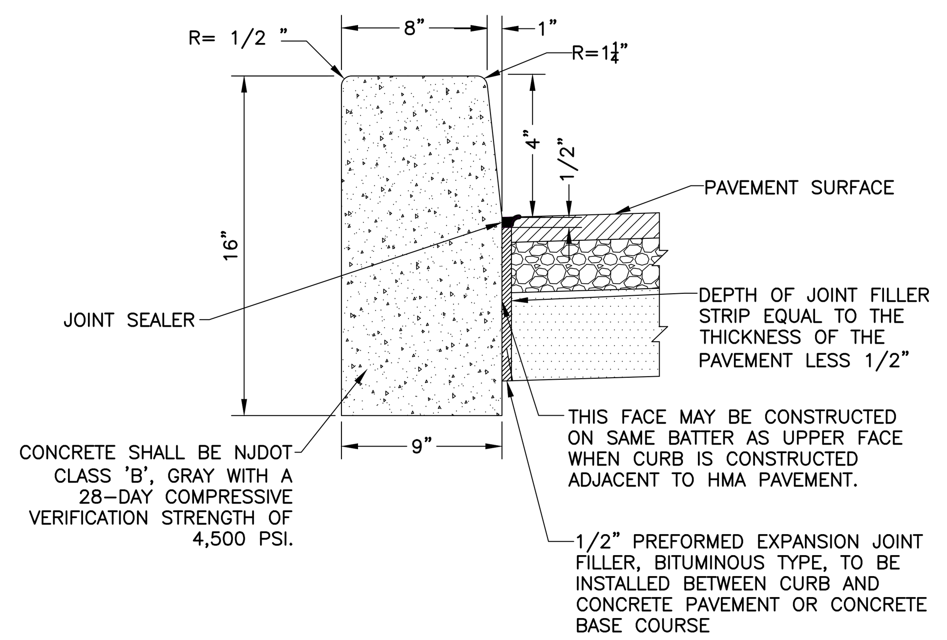

NOTES:
1. TRANSVERSE JOINTS 1/2" WIDE SHALL BE INSTALLED IN THE CURB 20'-0" APART AND SHALL BE FILLED WITH PREFORMED BITUMINOUS-IMPREGNATED FIBER JOINT FILLER RECESSED 1/4" IN FROM FRONT FACE AND TOP OF CURB.
2. EXPANSION JOINTS THRU AND ADJACENT TO THE CURB SHALL BE INCLUDED IN THE UNIT PRICE BID FOR CURB.

GRAY CONCRETE VERTICAL CURB (NJDOT RIGHT-OF-WAY)

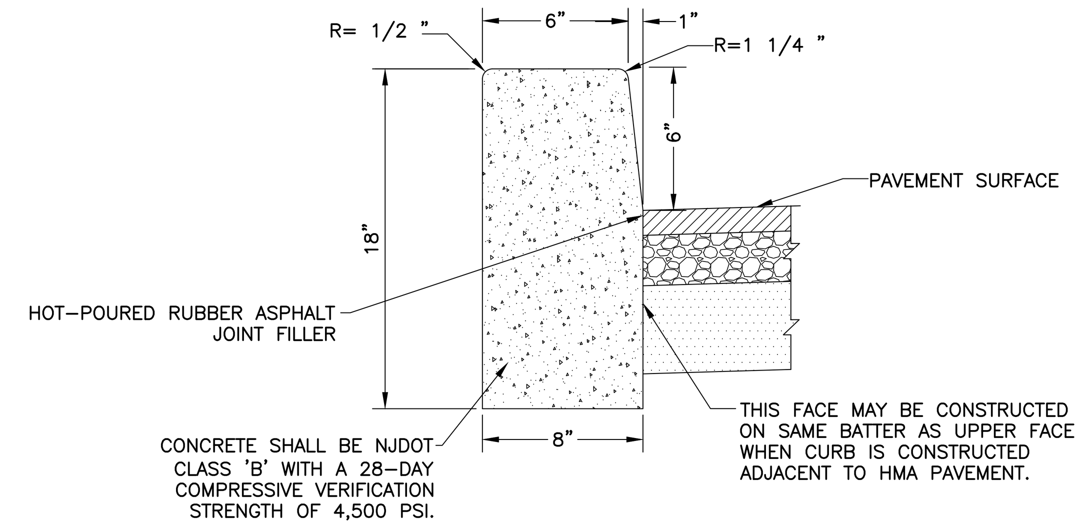

NOTES:
1. TRANSVERSE JOINTS 1/2" WIDE SHALL BE INSTALLED IN THE CURB 20'-0" APART AND SHALL BE SO ARRANGED THAT THEY MATCH EXPANSION JOINTS IN ADJACENT CONCRETE PAVEMENTS AND SIDEWALKS.
2. JOINTS SHALL BE FILLED WITH PREFORMED BITUMINOUS-IMPREGNATED FIBER JOINT FILLER, COMPLYING WITH THE REQUIREMENTS OF AASHTO M-213, RECESSED 1/4" FROM THE FRONT FACE AND TOP OF CURB.

CONCRETE VERTICAL CURB (SITE)

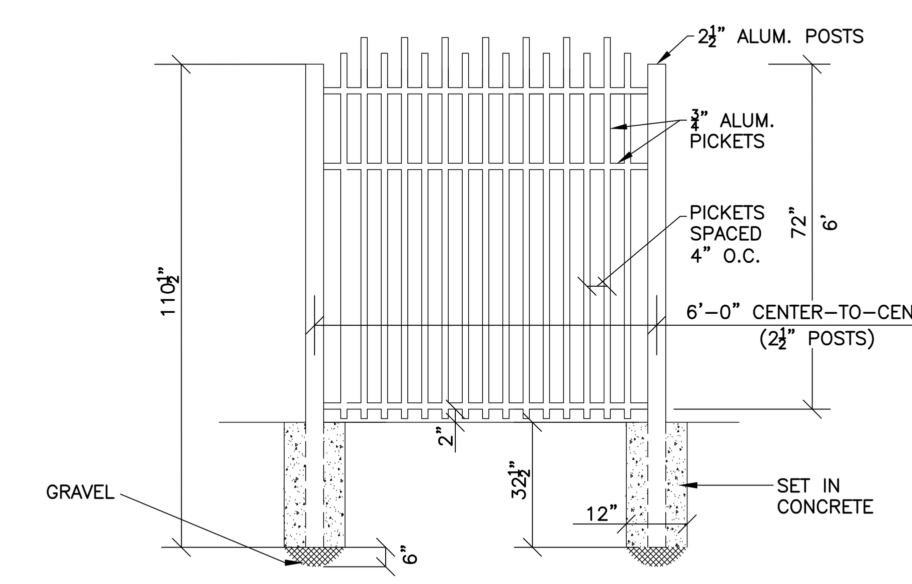

NOTES:
1. MANUFACTURED BY JERITH OR APPROVED EQUAL.

DECORATIVE ALUMINUM FENCE

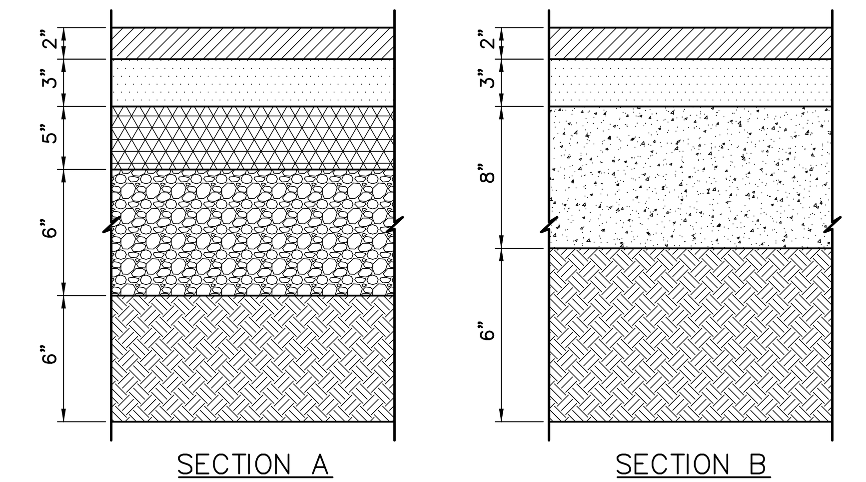

SECTION A: FOR NEW CONSTRUCTION, RECONSTRUCTION OR WIDENING MORE THAN FIVE (5) FEET IN WIDTH.

SECTION B: FOR PAVEMENT WIDENING LESS THAN FIVE (5) FEET IN WIDTH.

NOTES:
1. UNDERCUT SOFT SUBGRADE AREAS AND REPLACE WITH ADDITIONAL SUBBASE OR BORROW EXCAVATION.
2. DENSE GRADED AGGREGATE BASE COURSE AND SUBBASE SHOULD EXTEND A MINIMUM OF 3" BEYOND THE OUTER EDGE OF THE PROPOSED CURB.
3. SAWCUT AND APPLY TACK COAT TO EDGE OF EXISTING PAVEMENT PRIOR TO WIDENING.
4. THE LOCATIONS EXHIBITING MODERATE TO HIGH SEVERITY CRACKING, PATCHING, AND POTHOLES SHOULD BE REPAIRED (AFTER MILLING) IN ACCORDANCE WITH ITEM NO. 401021M OF NJ DEPARTMENT OF TRANSPORTATION STANDARD SPECIFICATIONS.
5. IF PAVEMENT CONSTRUCTION WILL ENCROACH IN AN EXISTING TRAVEL LANE, THEN RESURFACE THE FULL WIDTH OF THAT TRAVEL LANE.

LEGEND:
- HOT MIX ASPHALT 12.5M64 SURFACE COURSE
- HOT MIX ASPHALT 19M64 INTERMEDIATE COURSE
- HOT MIX ASPHALT 25M64 BASE COURSE
- DENSE GRADED AGGREGATE BASE COURSE
- CONCRETE BASE COURSE
- SUBBASE

PAVEMENT SECTIONS & NOTES (NJDOT RIGHT-OF-WAY)

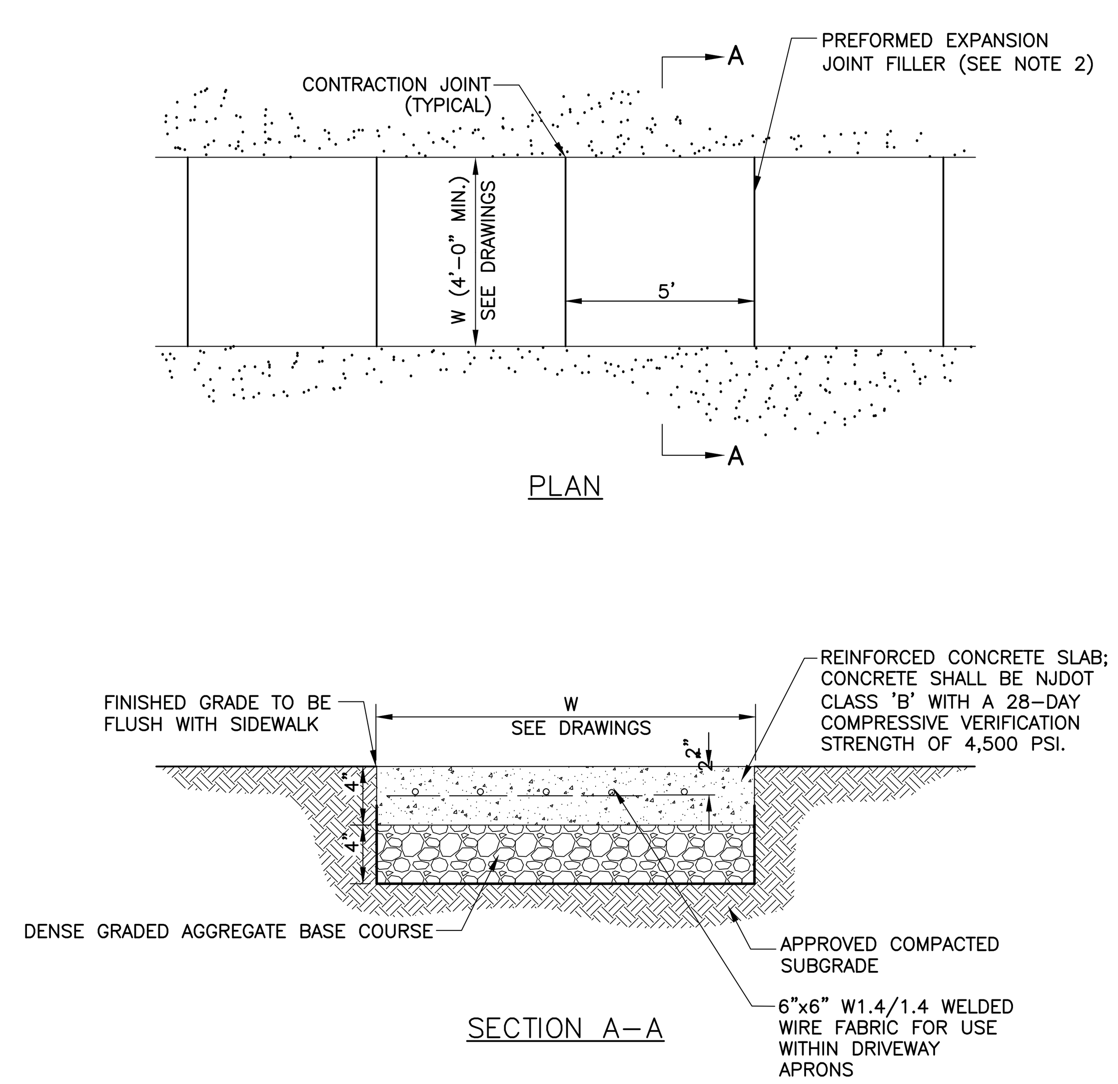

NOTES:

1. CONCRETE SIDEWALK:
   A) EXPANSION JOINTS, CONSISTING OF PREMOLDED BITUMINOUS JOINT FILLER, IN ACCORDANCE WITH ASTM DESIGNATION D-1751, ONE-HALF (1/2") THICK AND AS DEEP AS THE FULL DEPTH OF THE WALK, SHALL BE PLACED AT INTERVALS OF TWENTY (20') LONGITUDINALLY ALONG WALKS OR AS DIRECTED. EXPANSION JOINTS SHALL ALSO BE PLACED WHEREVER THE WALK ABUTS THE BUILDING, CONCRETE CURB, A LIGHTING STANDARD OR ANY OTHER RIGID OBJECT. THE JOINT FILLER SHALL BE SET ONE-QUARTER (1/4") BELOW THE FINISHED SURFACE OF THE CONCRETE.
   B) CONSTRUCTION JOINTS SHALL BE PLACED IN ALL WALKS AT FIVE (5') FOOT INTERVALS OR AS DIRECTED. THESE JOINTS SHALL ALSO BE FORMED BY SCORING A SLOT IN THE SLAB ABOUT ONE (1") DEEP, EDGED WITH A DOUBLE EDGER HELD AGAINST A STRAIGHT EDGE BEFORE THE CONCRETE HAS HARDENED AND DURING THE FINISHING PROCESS.
2. MAXIMUM CROSS SLOPE SHALL BE 1/4" PER FOOT, UNLESS OTHERWISE INDICATED ON DRAWINGS.
3. REINFORCING SHALL NOT EXTEND THROUGH EXPANSION JOINTS.
4. SIDEWALK SHALL HAVE LIGHT BROOM FINISH.
5. AT DRIVEWAYS AND APRONS, THE CONCRETE THICKNESS SHALL BE INCREASED TO SIX (6") INCHES.

CONCRETE SIDEWALK

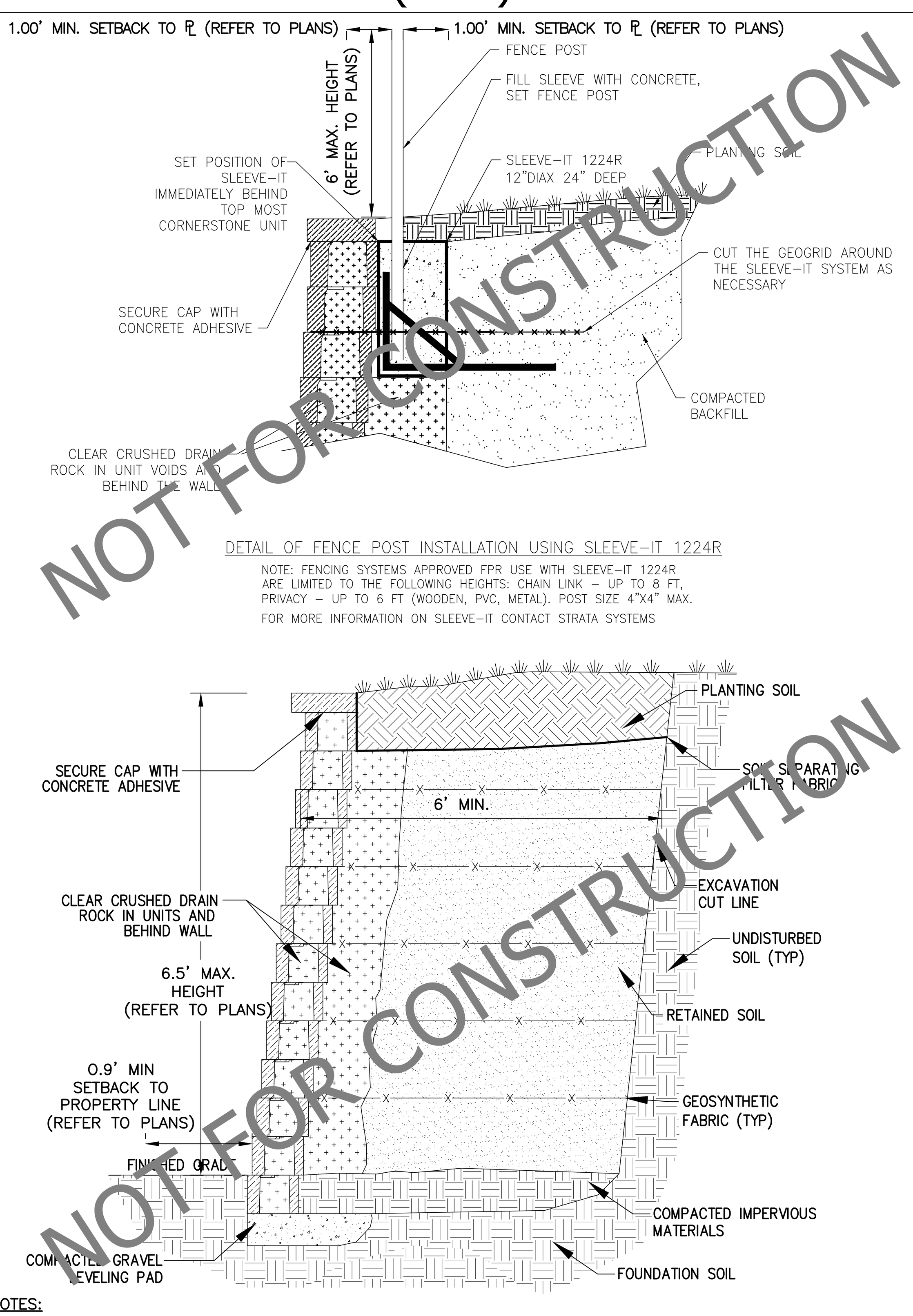

NOTES:
1. SITE SPECIFIC, DETAILED STRUCTURAL DRAWINGS AND CALCULATIONS SIGNED AND SEALED BY A NEW JERSEY LICENSED PROFESSIONAL ENGINEER SHALL BE PREPARED AND ACCEPTED BY THE BOROUGH ENGINEER PRIOR TO CONSTRUCTION.

SEGMENTAL BLOCK RETAINING WALL

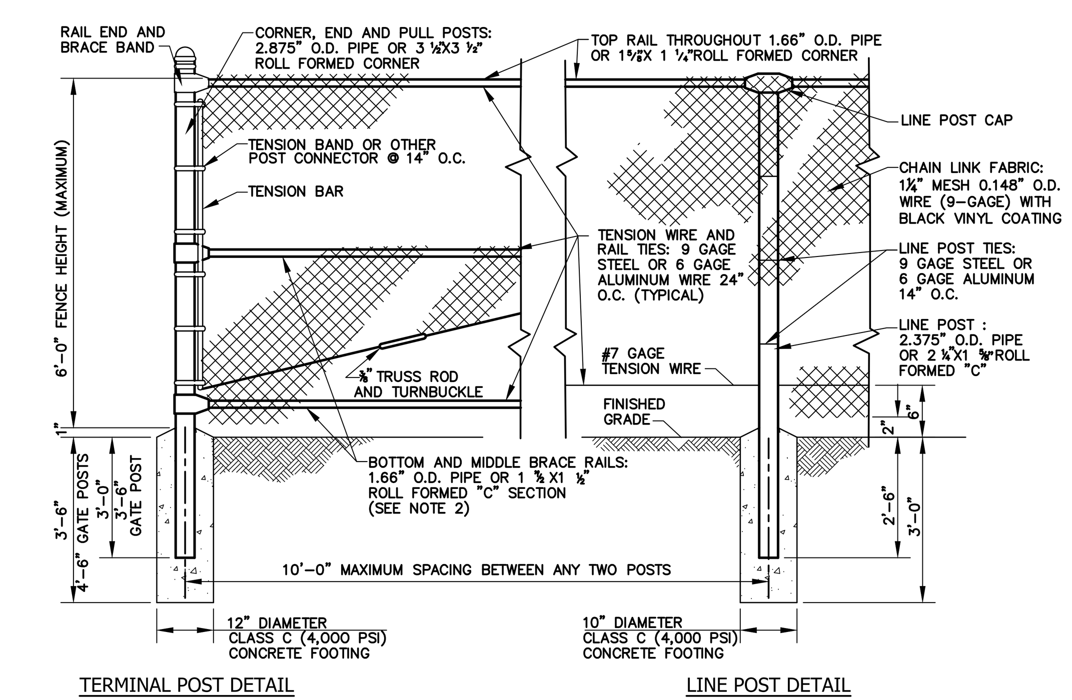

VINYL COATED STEEL CHAIN LINK FENCE
N.T.S.

GATE POSTS			
PIPE SIZE		SWING GATE OPENINGS	
NOM. O.D. PIPE	WEIGHT LB/FT	SINGLE GATE	DOUBLE GATE
2.875"	5.79	UP THRU 6'	UP THRU 12'
4.000"	9.11	7 THRU 13'	13 THRU 26'
6.625"	18.97	14 THRU 18'	27 THRU 36'
8.625"	28.55	19 THRU 32'	37 THRU 64'

NOTES:
1. PIPE SECTIONS SHOWN ARE ASTM F1083 FOR STANDARD WEIGHT (SCHEDULE 40) PIPE. EQUIVALENT STEEL SECTIONS FOR FRAME SHALL BE BASED ON PIPE SECTION SHOWN.
2. MIDDLE AND BOTTOM BRACE RAILS AND BRACE ROD ON ONE BAY EACH SIDE OF CORNER, END, PULL AND GATE POSTS ONLY.
3. CLASS B CONCRETE 3,000 PSI.
4. VINYL COATING SHALL BE BLACK.
5. MESH SIZE SHALL BE 1 3/4" NON-CLIMBABLE OR APPROVED EQUAL.

VINYL COATED STEEL CHAIN LINK FENCE

L2A LAND DESIGN LLC
60 GRAND AVENUE
ENGLEWOOD. NJ 07631
201.227.0300 • 201.227.0001 (Fax)
www.L2Alanddesign.com
New Jersey Certificate of Authorization No. 24GA28130900

10/1/2020
Michael E. Dipple, P.E. Date
New Jersey Professional Engineer #24GE04081200

WARNING: IF THIS PLAN DOES NOT CONTAIN A RAISED IMPRESSION SEAL OVER THE PROFESSIONAL SIGNATURE IT IS NOT AN AUTHORIZED OFFICIAL COPY.

APPLICANT:
PSI ATLANTIC USR NJ, LLC
530 OAK COURT DRIVE, SUITE 185
MEMPHIS, TN 38117
901.290.0184 (PHONE)

OWNER:
KRISUJEN REALTY, L.P.
A NEW JERSEY LIMITED PARTNERSHIP
7 INDUSTRIAL AVENUE
MAHWAH, NJ 07430
201.525.6292 (PHONE)

ARCHITECT:
PARKER STUDIOS
1300 MINT STREET, SUITE 110
CHARLOTTE, NC 28203
980.819.0416 (PHONE)

SURVEYOR:
LAKELAND SURVEYING, INC.
4 WEST MAIN STREET
ROCKAWAY, NJ 07866
973.625.5670 (PHONE)
973.625.4121 (FAX)

NO.	REVISION	DATE
1	REVISED PER COMPLETENESS REVIEW	5/1/2020
2	REVISED DRAINAGE PER NJDOT COMMENTS, DATED 7/21/2020	8/12/2020
3	REVISED PER PLANNING BOARD RESUBMISSION	10/1/2020

Previous Editions Obsolete

PROJECT LOCATION:
PROPOSED SELF-STORAGE FACILITY
100 N.J.S.H. ROUTE 17 NORTH
BOROUGH OF UPPER SADDLE RIVER,
BERGEN COUNTY, NJ

BLOCK: 1304; LOT: 7.01
TAX MAP: 13

DRAWING TITLE:
DETAILS - 2

SCALE:	REFER TO PLAN
DATE	1/17/2020
DESIGNED:	TEC
APPROVED:	MED
L2A PROJ. No.:	1901.161
DRAWING No.:	C-10

L2A LAND DESIGN, LLC — ALL RIGHTS RESERVED
THE COPY OR REUSE OF THIS DOCUMENT, OR PORTIONS THEREOF, FOR USE OTHER THAN THE PURPOSE ORIGINALLY INTENDED, WITHOUT THE WRITTEN PERMISSION OF L2A LAND DESIGN, LLC IS PROHIBITED.

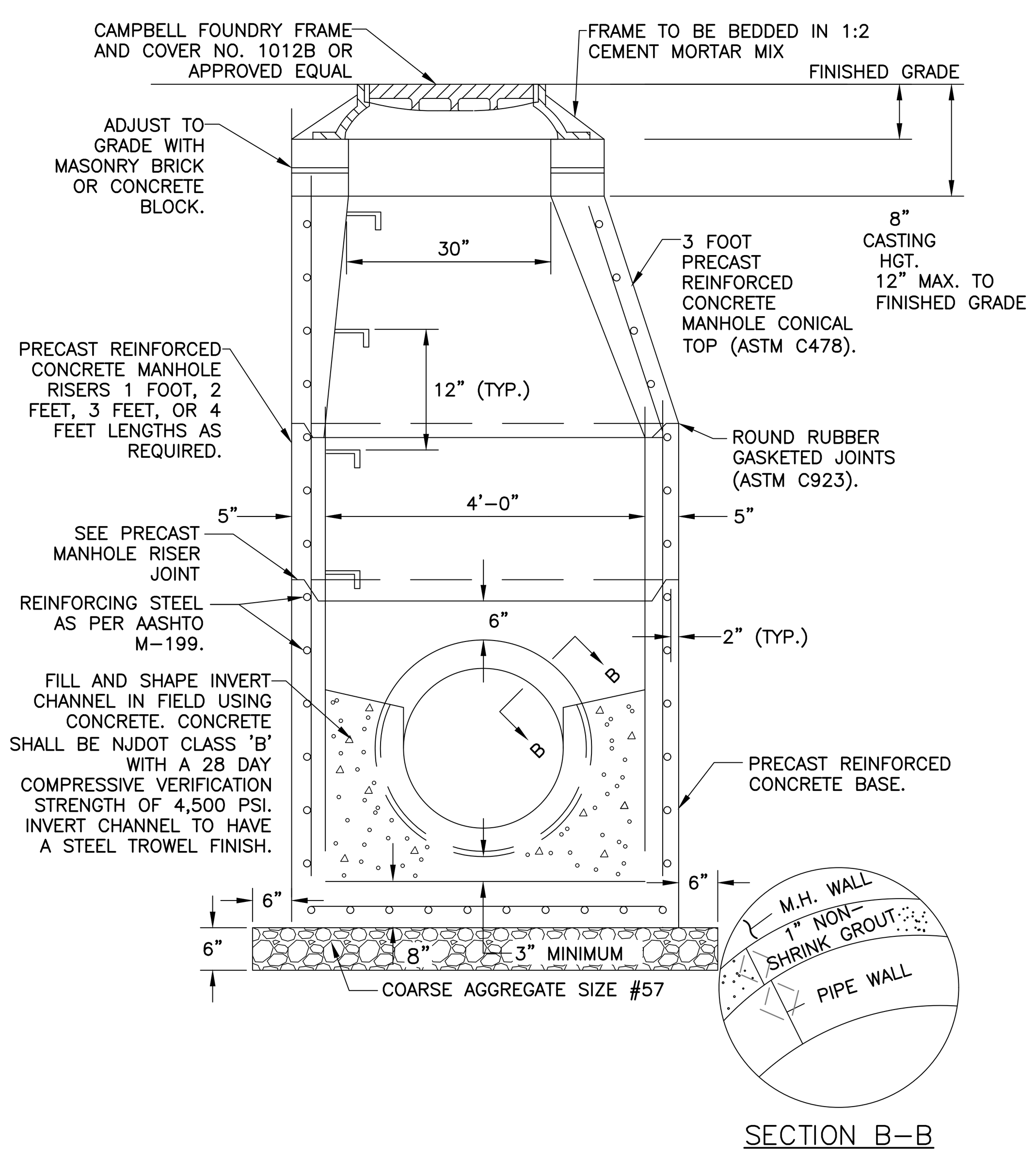

NOTES:

1. FRAMES AND COVERS SHALL BE OF CAST IRON, CONFORMING TO ASTM A48, CLASS 30 AND SUITABLE FOR H-20 LOADING CAPACITY. MANHOLE COVERS IN REMOTE LOCATIONS SHALL HAVE A LOCKING DEVICE.

STORM SEWER MANHOLE

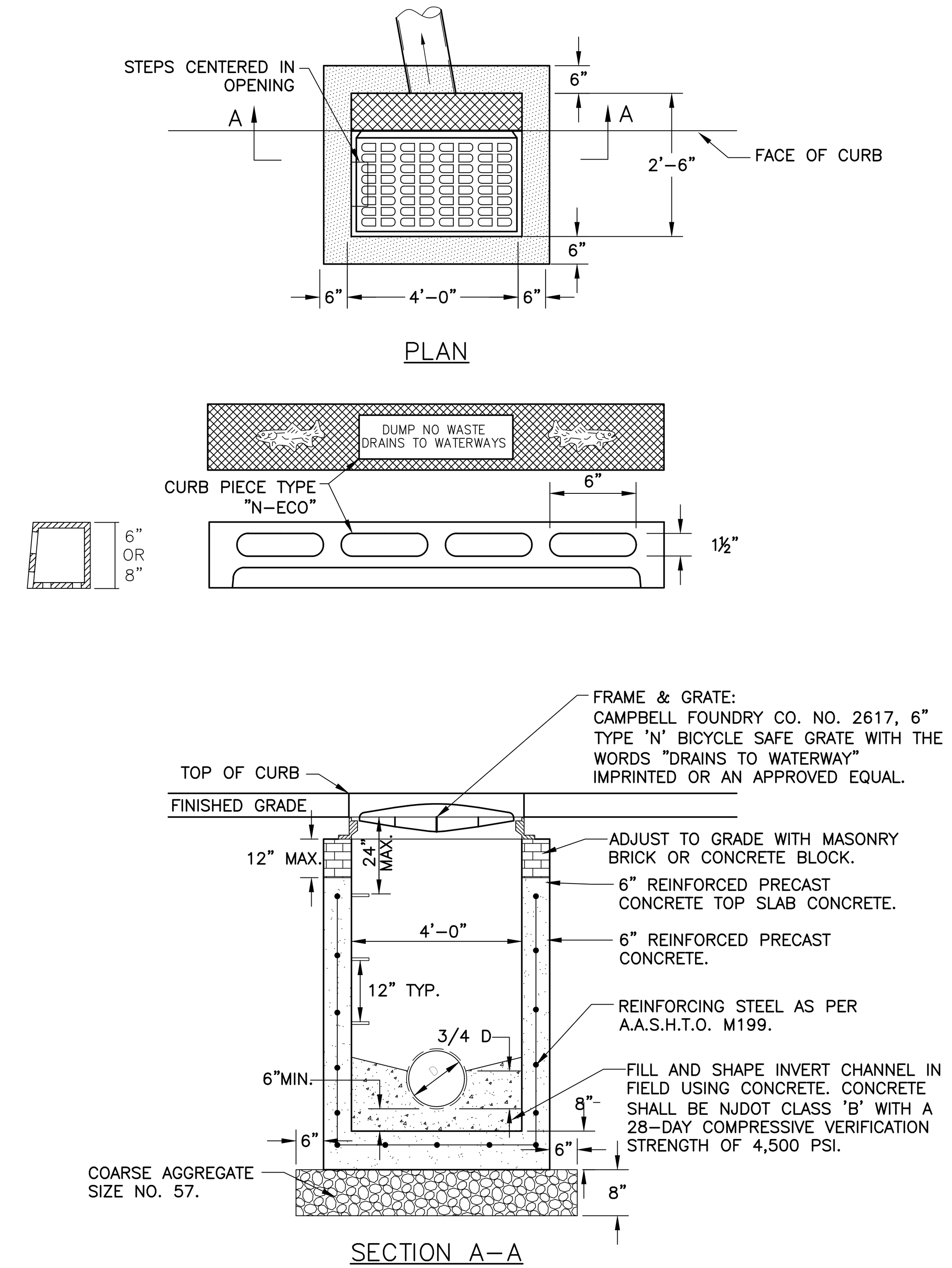

NOTES:

1. FRAMES AND GRATES SHALL BE OF CAST IRON, CONFORMING TO ASTM A48, CLASS 30 AND SUITABLE FOR H-20 LOADING CAPACITY. MANHOLE COVERS IN REMOTE LOCATIONS SHALL HAVE A LOCKING DEVICE.

TYPE 'D' INLET

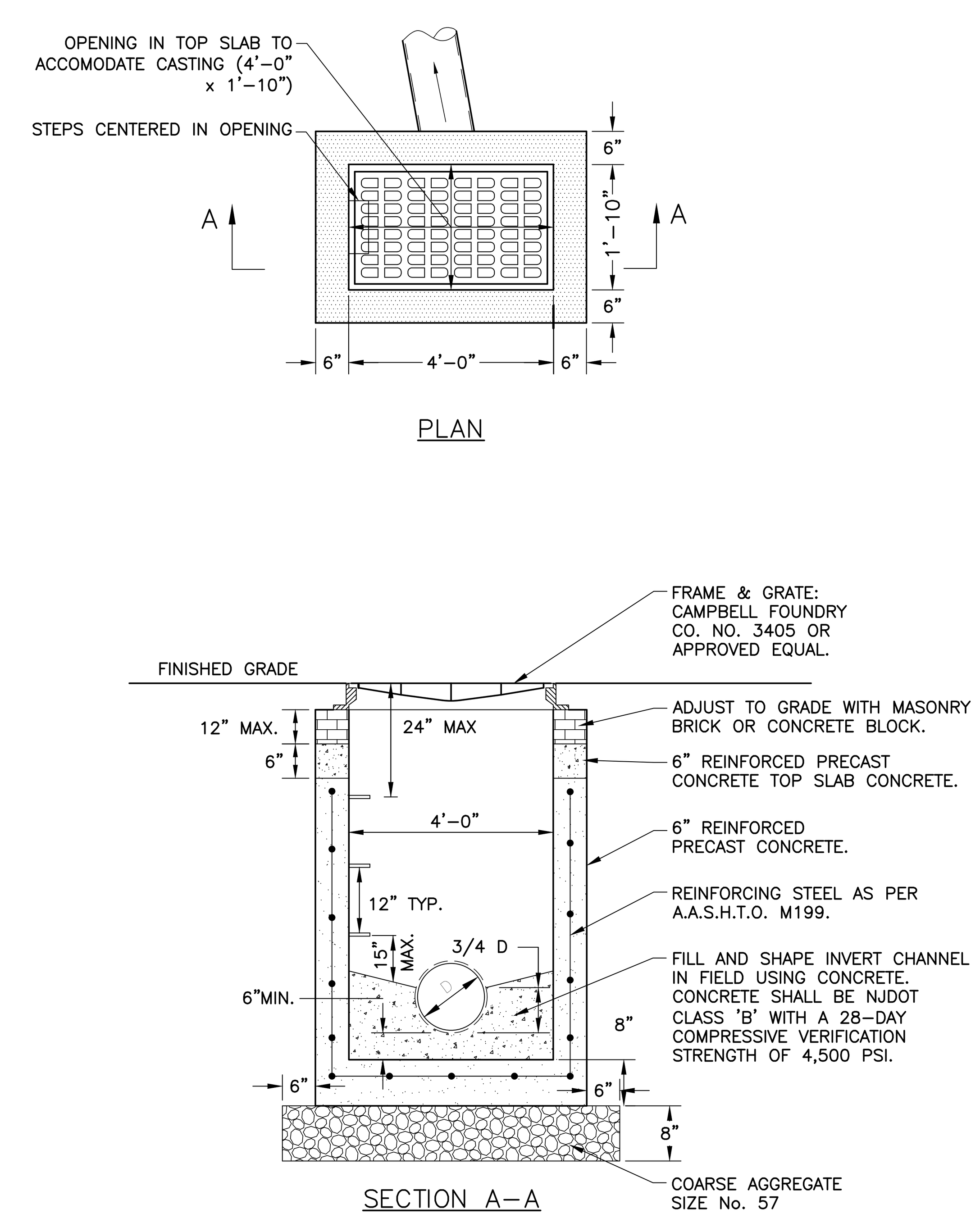

NOTES:

1. FRAMES AND GRATES SHALL BE OF CAST IRON, CONFORMING TO ASTM A48, CLASS 30 AND SUITABLE FOR H-20 LOADING CAPACITY. MANHOLE COVERS IN REMOTE LOCATIONS SHALL HAVE A LOCKING DEVICE.

TYPE 'A' INLET

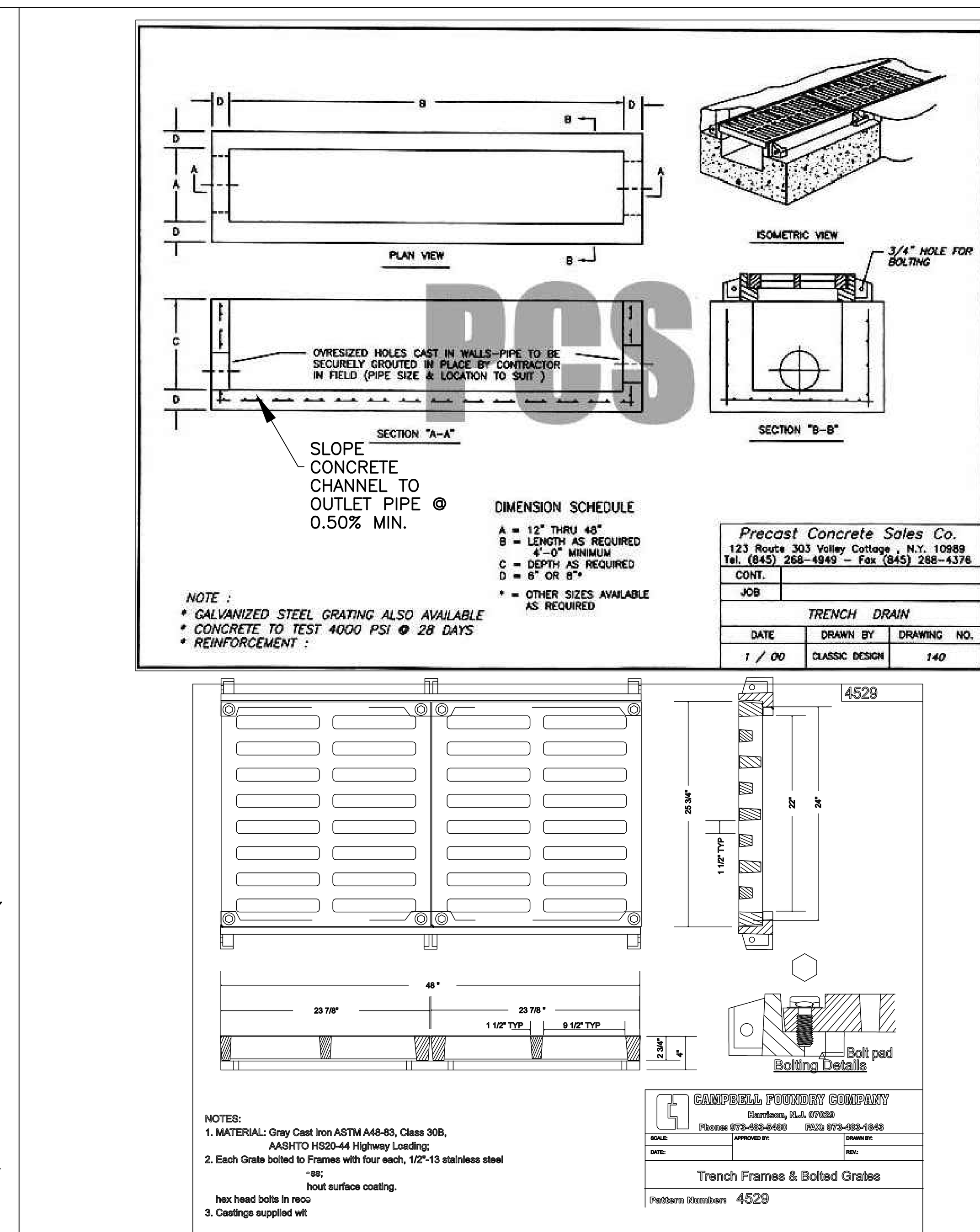

STRUCTURE ID	PIPE DIA.	RIM EL.	INVERT(A)	INVERT(B)	INVERT(C)	DIM. "A"	DIM. "B"	DIM. "C"	DIM. "D"
TD-1	12"	290.40	284.08	284.10	284.05	12"	16'-6"	6'-3"	8"
TD-2	15"	283.60	281.19	281.10	–	15"	16'-6"	2'-6"	8"
TD-3	15"	283.20	281.00	280.94	–	15"	13'-6"	2'-3"	8"

NOTES:

1. CONCRETE SHALL BE CLASS 'B' WITH A 28-DAY COMPRESSIVE VERIFICATION STRENGTH OF 4,500 PSI.
2. REINFORCING STEEL SHALL BE IN ACCORDANCE WITH AASHTO M199 FOR HS20 LOADING CAPACITY.
3. MANUFACTURED BY: PRECAST CONCRETE SALES CO., 123 ROUTE 303 VALLEY COTTAGE, NY 10989 (845) 268-4949.
4. ALL BACKFILL MATERIAL TO BE COMPACTED TO 95% STANDARD PROCTOR.

TRENCH DRAIN STRUCTURE (PRECAST CONCRETE SALES CO.) & TRENCH DRAIN FRAME & GRATE (CAMPBELL FOUNDRY CO.)

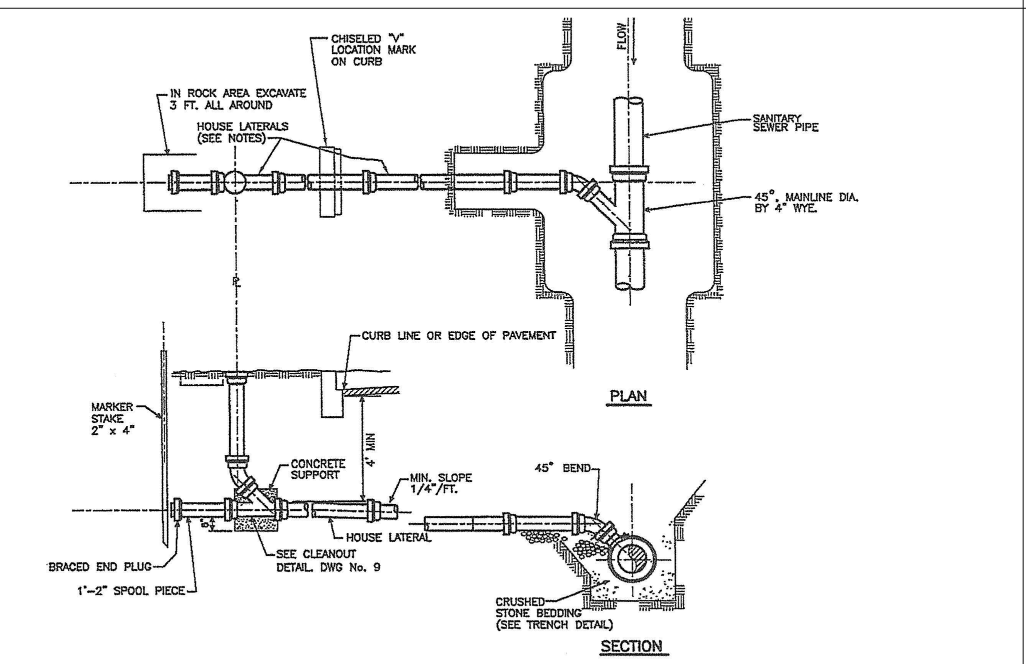

NOTES:

1. BUILDING SEWER LATERALS SHALL BE CONSTRUCTED OF SAME MATERIAL AND CLASS AS THE MAIN SANITARY SEWER.
2. BOROUGH OF RAMSEY STANDARD DETAIL REFERENCED BY CREW ENGINEERS, INC.

BUILDING SEWER DETAIL

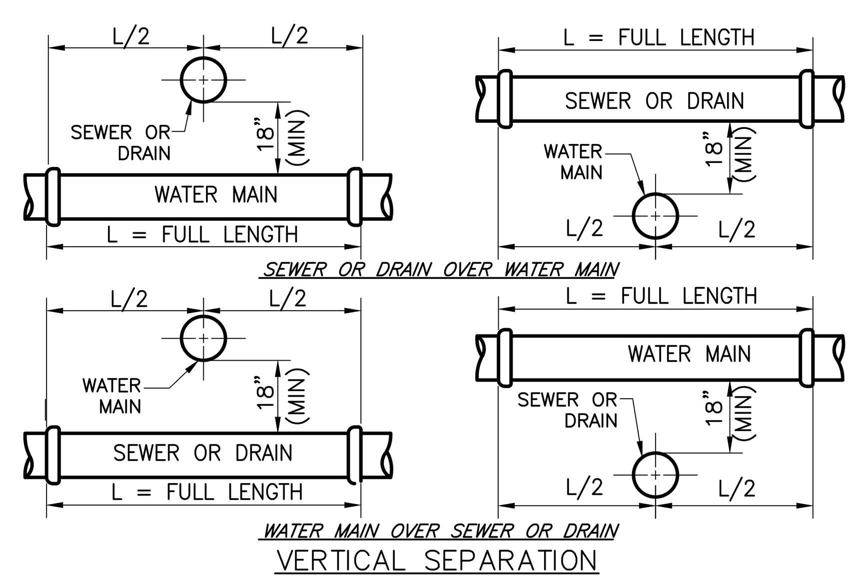

NOTES: (VERTICAL SEPARATION)

1. NORMAL CONDITIONS – WHENEVER A WATER MAIN MUST CROSS OVER OR UNDER A SEWER OR DRAIN, THE PIPES SHALL BE LAID TO PROVIDE A VERTICAL SEPARATION BETWEEN THEM OF AT LEAST 18 INCHES, AS MEASURED FROM THE BOTTOM OF THE HIGHER PIPE TO THE CROWN OF THE LOWER PIPE.
2. UNUSUAL CONDITIONS – WHERE APPROPRIATE SEPERATION FROM A WATER MAIN IS NOT POSSIBLE, THE SEWER SHALL BE ENCASED IN CONCRETE, OR CONSTRUCTED OF DUCTILE IRON PIPE USING MECHANICAL OR SLIP-ON JOINTS FOR A DISTANCE OF AT LEAST 10 FEET ON EITHER SIDE OF THE CROSSING. IF SUCH LATERAL SEPERATION IS NOT POSSIBLE, THE PIPES SHALL BE IN SEPERATE TRENCHES WITH THE SEWER AT LEAST 18" BELOW THE BOTTOM OF THE WATER MAIN, OR SUCH OTHER SEPERATION AS APPROVED BY THE NJSDEP.
3. 3. WATER MAIN CROSSINGS UNDER SEWERS
   A. VERTICAL SEPARATION OF 18 INCHES MUST BE PROVIDED.
   B. ADEQUATE STRUCTURAL SUPPORT MUST BE PROVIDED FOR THE SEWER TO PREVENT EXCESSIVE DEFLECTION OF JOINTS AND SETTLING.
   C. FULL LENGTH OF WATER PIPE MUST BE CENTERED AT THE POINT OF CROSSING; NO JOINTS WILL BE PERMITTED AT THE POINT OF CROSSING.
   D. SEWERS MUST BE CONSTRUCTED OF MATERIALS AND WITH JOINTS EQUIVALENT TO WATER MAIN STANDARDS AND PRESSURE TESTED.

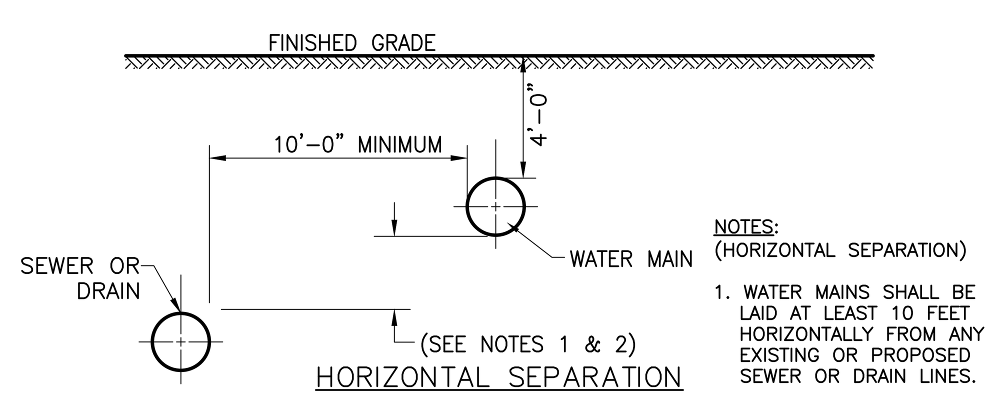

NOTES: (HORIZONTAL SEPARATION)

1. WATER MAINS SHALL BE LAID AT LEAST 10 FEET HORIZONTALLY FROM ANY EXISTING OR PROPOSED SEWER OR DRAIN LINES.

SEPARATION OF WATER AND SEWER/DRAIN LINES

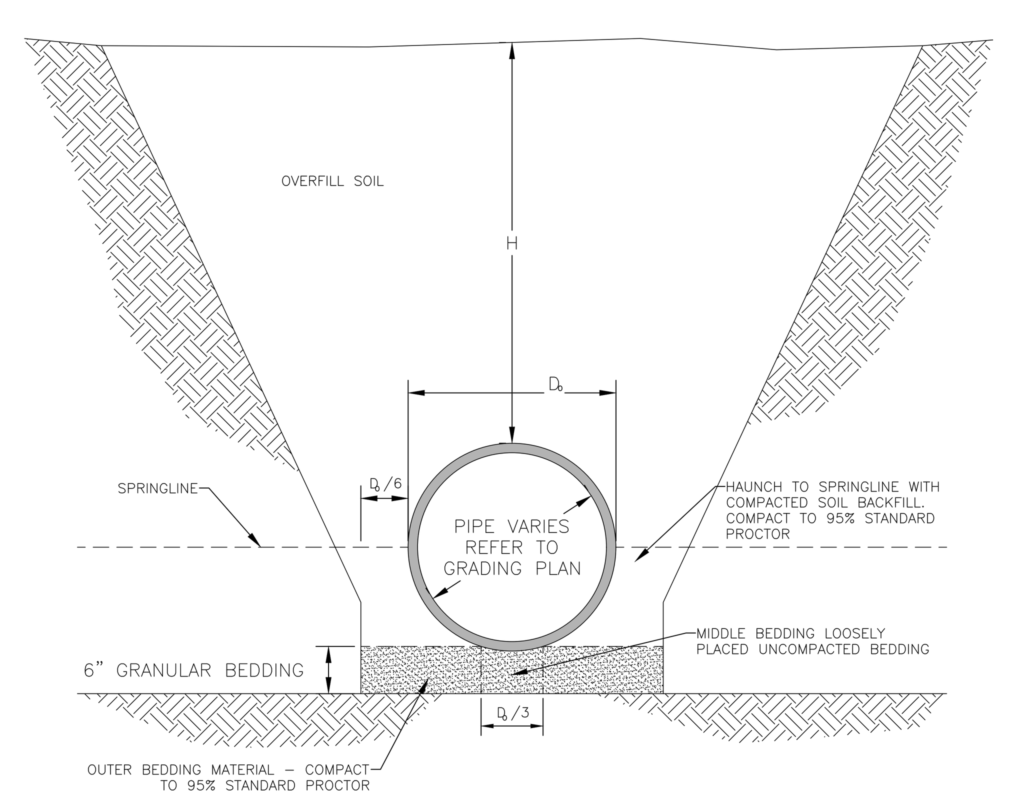

NOTES:

1. BEDDING BENEATH PIPE SHALL NOT BE REQUIRED WHERE DEPTH OF PIPE, 'H' IS LESS THAN 8 FEET.
2. MATERIAL IN THE OUTER BEDDING AND HAUNCH, EXCEPT UNDER THE MIDDLE 1/3 OF THE PIPE, SHALL BE COMPACTED TO AT LEAST THE SAME COMPACTION AS THE MAJORITY OF SOIL IN THE OVERFILL ZONE.
3. FOR TRENCHES, WIDTH SHALL BE WIDER THAN SHOWN IF REQUIRED FOR ADEQUATE SPACE TO ATTAIN THE SPECIFIED COMPACTION IN THE HAUNCH AND BEDDING ZONES.
4. THIS DETAIL SHALL BE USED FOR ALL PIPES EXCEPT SANITARY SEWER LINES.

PIPE BEDDING & MATERIALS

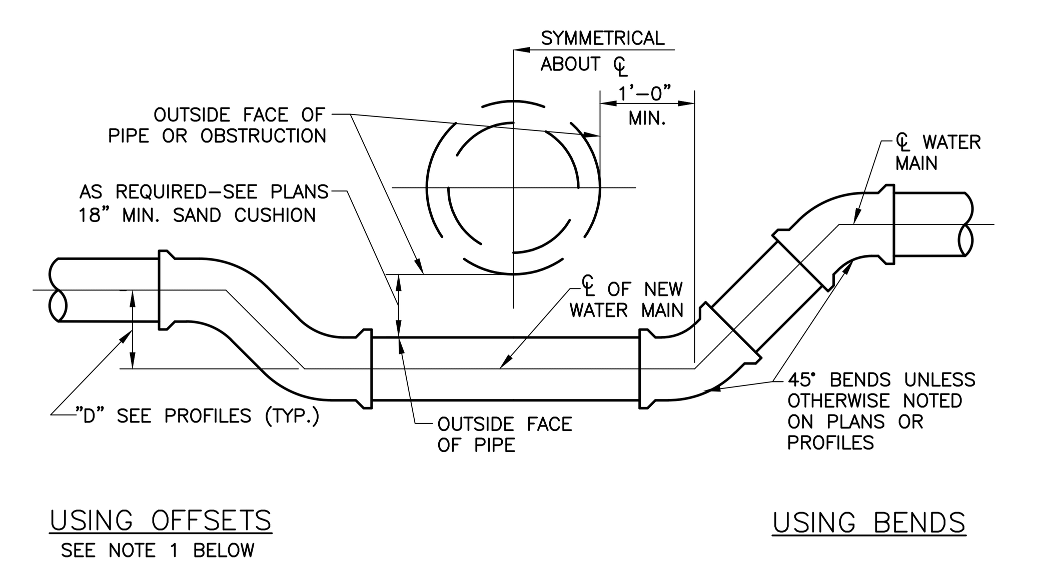

NOTES:

1. VERTICAL OFFSET FITTINGS MAY BE USED IN PLACE OF BENDS ONLY WHERE "D" IS 18" OR LESS.
2. WATER MAIN CROSSING ABOVE STRUCTURE IS SIMILAR.

WATER LINE CROSSING BELOW OBSTRUCTION

TRENCH WIDTHS		
PIPE SIZE	TRENCH WIDTH "B" MIN.	TRENCH WIDTH "B" MAX.
4"	24"	30"
6"	24"	30"
8"	24"	36"
10"	26"	36"
12"	28"	40"
14"	30"	42"
16"	30"	42"
18"	32"	42"
24"	42"	60"
30"	50"	62"
36"	56"	68"

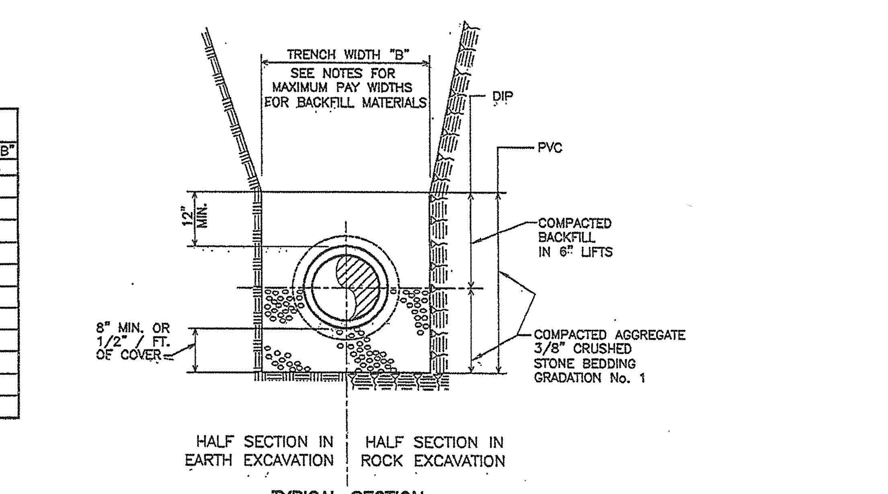

NOTES:

1. TRENCH WIDTH "B" IS MEASURED AT A POINT 12" ABOVE TOP OF PIPE. TRENCH WIDTH AT 12" ABOVE TOP OF PIPE CAN NOT EXCEED "B" MAX. TRENCH WIDTH ABOVE THIS POINT CAN EXCEED "B" MAX.
2. TRENCH WIDTH REQUIRED FOR STEEL TRENCH BOXES IN EXCESS OF THE MAXIMUM WIDTHS INDICATED ABOVE WILL BE SUBJECT TO THE APPROVAL OF THE ENGINEER.
3. IF THE EXCAVATED MATERIAL IS JUDGED TO BE UNSUITABLE FOR BACKFILL BY THE ENGINEER, IT WILL BE REMOVED FROM THE SITE BY THE CONTRACTOR AND REPLACED WITH SELECT FILL.
4. IN UNSTABLE TRENCHES PROVIDE SUFFICIENT 1 ½" CRUSHED STONE TO WITHIN 8" OF THE BOTTOM OF PIPE TO PREPARE A FIRM BASE FOR THE ⅜" CRUSHED STONE BEDDING. IF REQUIRED BY THE ENGINEER, EXTEND THE ⅜" CRUSHED STONE COMPACTED IN PLACE TO 12" ABOVE THE TOP OF PIPE.
5. BOROUGH OF RAMSEY STANDARD DETAIL REFERENCED BY CREW ENGINEERS, INC.

BUILDING SEWER TRENCH DETAIL

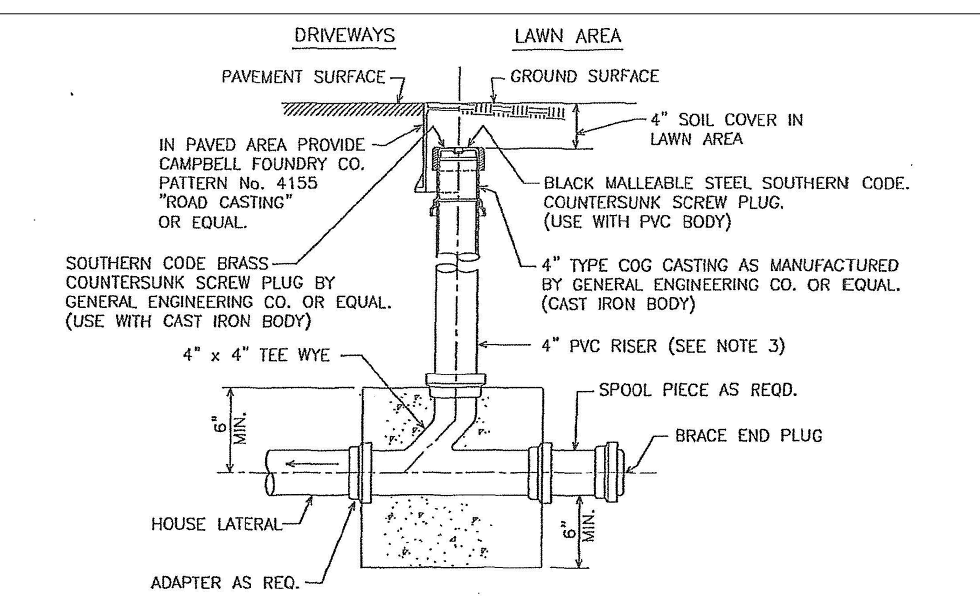

NOTES:

1. FLEXIBLE ADAPTORS WILL BE FERNCO, OR APPROVED EQUAL.
2. END CAP WILL BE SECURED TIGHTLY TO THE PIPE AND PROPERLY BRACED TO ELIMINATE LEAKAGE AND MOVEMENT.
3. IN PAVED AREAS CLEANOUTS AND HOUSE CONNECTION TEE WYE SHALL BE CONSTRUCTED OF DIP. PROVIDE ADAPTER AS REQUIRED.
4. BOROUGH OF RAMSEY STANDARD DETAIL REFERENCED BY CREW ENGINEERS, INC.

BUILDING SEWER CLEANOUT

L2A LAND DESIGN LLC
60 GRAND AVENUE
ENGLEWOOD, NJ 07631
201.227.0300 • 201.227.0001 (Fax)
www.L2Alanddesign.com
New Jersey Certificate of Authorization No. 24GA28130900

10/1/2020
Michael E. Dipple, P.E. Date
New Jersey Professional Engineer #24GE04081200

WARNING: IF THIS PLAN DOES NOT CONTAIN A RAISED IMPRESSION SEAL OVER THE PROFESSIONAL SIGNATURE IT IS NOT AN AUTHORIZED OFFICIAL COPY.

APPLICANT:
PSI ATLANTIC USR NJ, LLC
530 OAK COURT DRIVE, SUITE 185
MEMPHIS, TN 38117
901.290.0184 (PHONE)

OWNER:
KRISUJEN REALTY, L.P.
A NEW JERSEY LIMITED PARTNERSHIP
7 INDUSTRIAL AVENUE
MAHWAH, NJ 07430
201.525.6292 (PHONE)

ARCHITECT:
PARKER STUDIOS
1300 MINT STREET, SUITE 110
CHARLOTTE, NC 28203
980.819.0416 (PHONE)

SURVEYOR:
LAKELAND SURVEYING, INC.
4 WEST MAIN STREET
ROCKAWAY, NJ 07866
973.625.5670 (PHONE)
973.625.4121 (FAX)

NO.	REVISION	DATE
1	REVISED PER COMPLETENESS REVIEW	5/1/2020
2	REVISED DRAINAGE PER NJDOT COMMENTS, DATED 7/21/2020	8/12/2020
3	REVISED PER PLANNING BOARD RESUBMISSION	10/1/2020

Previous Editions Obsolete

PROJECT LOCATION:
PROPOSED SELF-STORAGE FACILITY
100 N.J.S.H. ROUTE 17 NORTH
BOROUGH OF UPPER SADDLE RIVER,
BERGEN COUNTY, NJ

BLOCK: 1304; LOT: 7.01
TAX MAP: 13

DRAWING TITLE:
DETAILS - 3

SCALE:	REFER TO PLAN
DATE	1/17/2020
DESIGNED:	TEC
APPROVED:	MED
L2A PROJ. No.:	1901.161
DRAWING No.:	C-11

L2A LAND DESIGN, LLC – ALL RIGHTS RESERVED
THE COPY OR REUSE OF THIS DOCUMENT, OR PORTIONS THEREOF, FOR USE OTHER THAN THE PURPOSE ORIGINALLY INTENDED, WITHOUT THE WRITTEN PERMISSION OF L2A LAND DESIGN, LLC IS PROHIBITED.

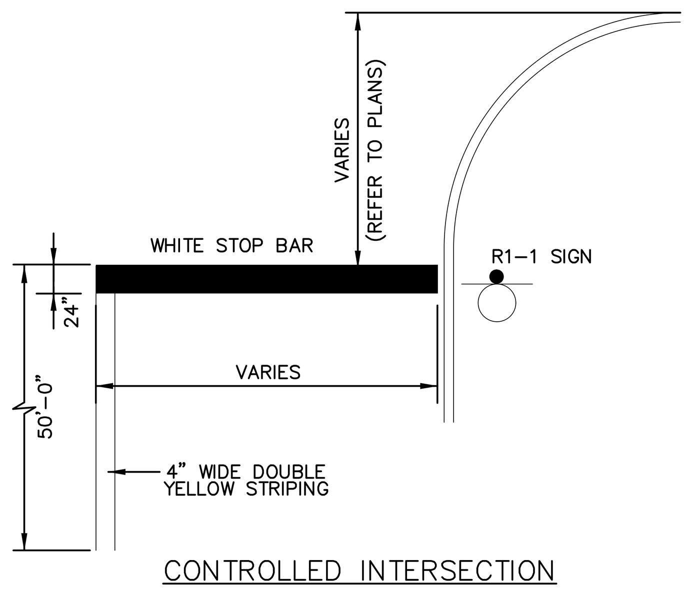

CONTROLLED INTERSECTION

NOTES:
1. THE CONTRACTOR SHALL ESTABLISH MARKING LINE POINTS FOR STRIPING AT TWENTY-FIVE (25) FOOT INTERVALS THROUGHOUT THE LENGTH OF THE PAVEMENT.
2. THE CONTRACTOR MAY APPLY WHITE AND YELLOW PAINT, UTILIZING ROLLERS AND/OR BRUSHED FOR MARKING GORE AREAS, TURN ARROWS, LETTERS, STOP BARS AND SHORT TEMPORARY DETOURS.
3. NORMAL SPREADING RATES FOR PAVEMENT MARKING PAINTS SHALL BE FROM 100 TO 115 SQUARE FEET PER GALLON SO AS TO OBTAIN A WET FILM THICKNESS OF +/- 15 MILS.

STOP LINE STRIPING

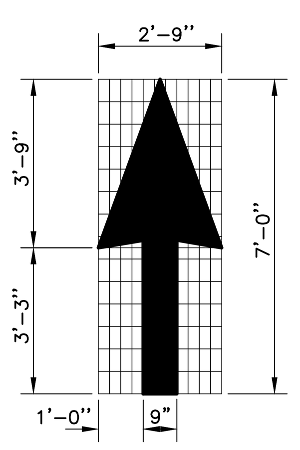

ELONGATED ARROWS FOR PAVEMENT MARKINGS (WHITE)

PAVEMENT TEXT & ARROWS

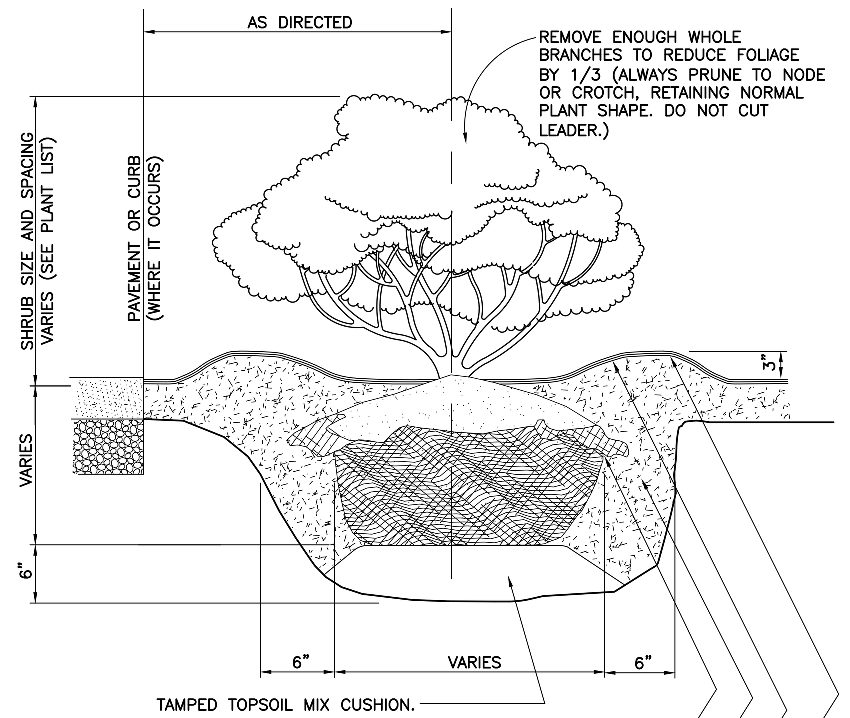

SHRUB PLANTING NOTES:

1. CONTRACTOR SHALL HAVE OPTION OF PLANTING SHRUBS IN INDIVIDUAL PITS AS SHOWN OR IN UNINTERRUPTED EXCAVATION FOR ENTIRE BED. IN EITHER CASE BACKFILL WITH "CERTIFIED CLEAN" TOPSOIL MIX AS SPECIFIED.

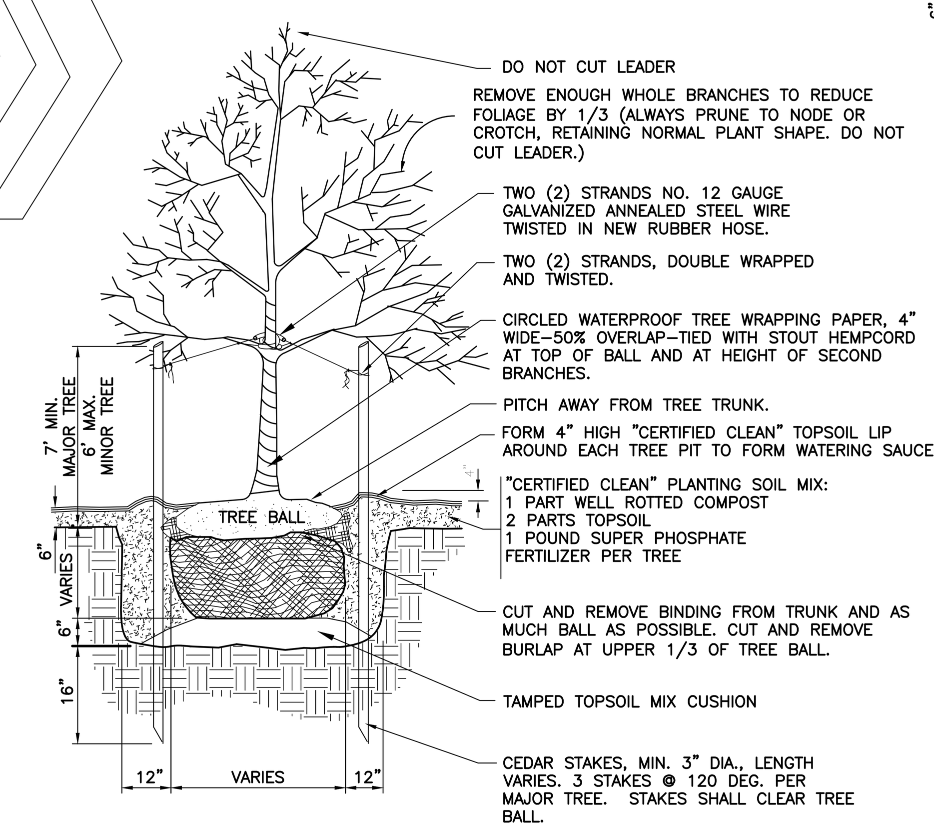

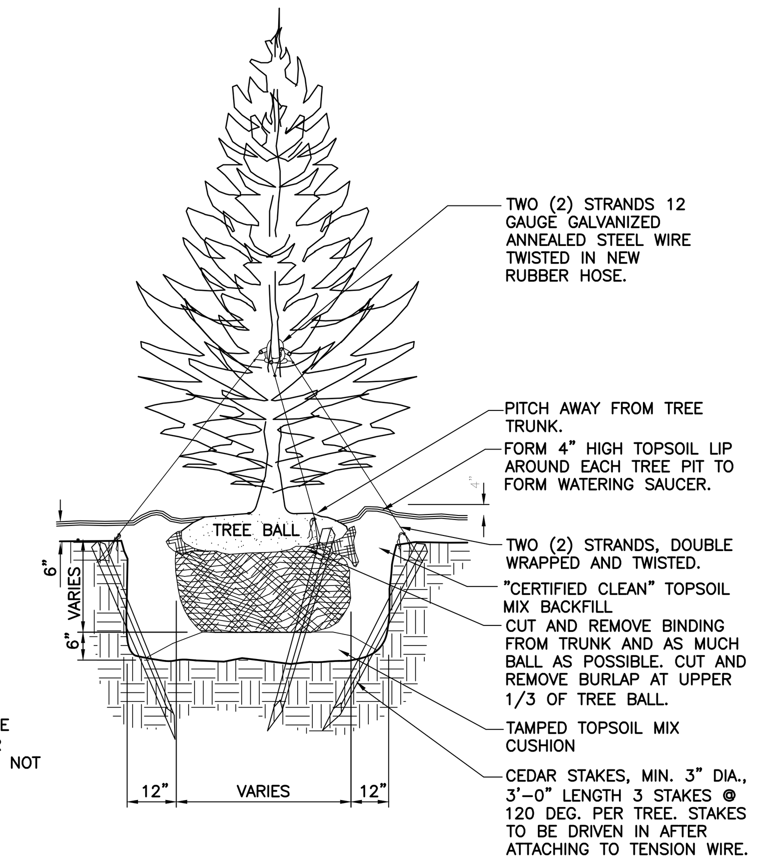

EVERGREEN TREE PLANTING NOTES:

1. PROVIDE 3" LAYER OF "CERTIFIED CLEAN" MULCH AS SPECIFIED OVER ENTIRE WATERING SAUCER AT ALL TREE PITS OR OVER ENTIRE TREE BED.

GENERAL PLANTING NOTES:

1. ALL NEW PLANTINGS SHALL HAVE "CERTIFIED CLEAN" SOIL AROUND THE ROOT BALL AND THREE INCHES (3") OF "CERTIFIED CLEAN" MULCH AS AN ENGINEERING CONTROL.

DECIDUOUS TREE PLANTING NOTES:

1. PROVIDE 3" LAYER OF "CERTIFIED CLEAN" MULCH AS SPECIFIED OVER ENTIRE WATERING SAUCER AT ALL TREE PITS OR OVER ENTIRE TREE BED.

SHRUB, DECIDUOUS, AND EVERGREEN TREE PLANTINGS

FG-LP-0002

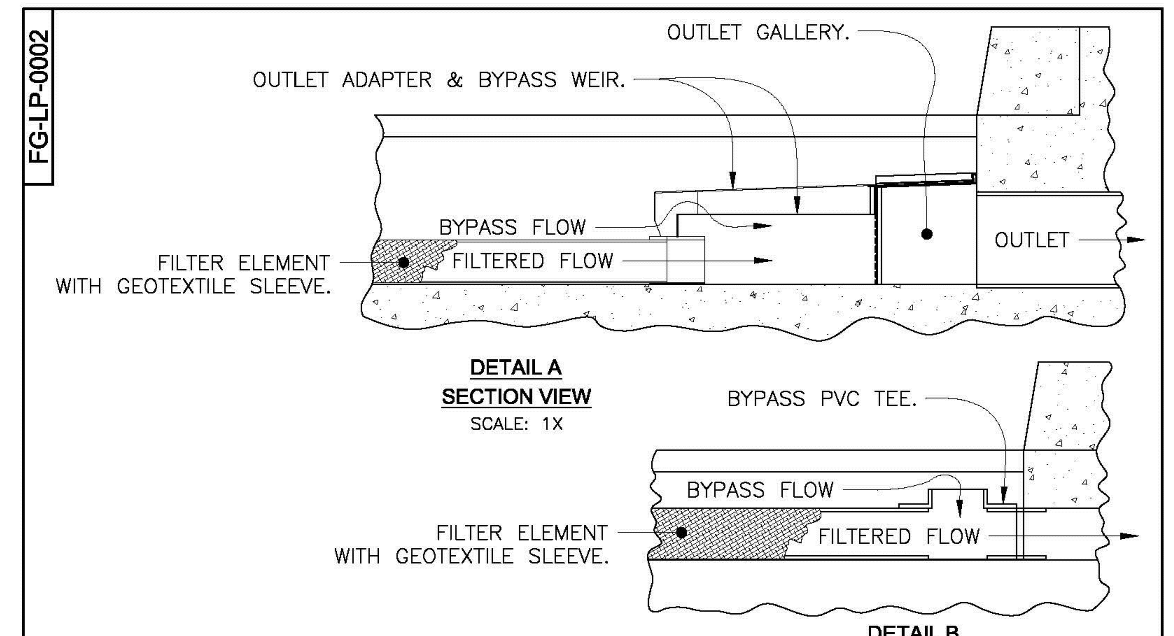

DETAIL B
SECTION VIEW
ALTERNATE ADAPTER CONFIGURATION
SCALE: 1X

SPECIFIER CHART						
MODEL	FILTER TYPE	TRENCH WIDTH "ID" (CLEAR OPENING)	MINIMUM TRENCH DEPTH (FROM BOTTOM OF GRATE)	SOLIDS STORAGE CAPACITY CUBIC FEET **	FILTERED FLOW CUBIC FEET / SECOND **	TOTAL BYPASS CAPACITY CUBIC FEET /SECOND
FG-TDOF3	PIPE *	3.0	6.5	0.1	0.5	0.1
FG-TDOF4	PIPE *	4.0	6.5	0.2	0.5	0.1
FG-TDOF6	PIPE	6.0	6.5	0.4	0.5	0.2
FG-TDOF8	PIPE	8.0	6.5	0.7	0.5	0.3
FG-TDOF10	PIPE	10.0	6.5	0.9	0.5	0.5
FG-TDOF12	PIPE	12.0	6.5	0.9	1.0	0.6
FG-TDOF18	PIPE	18.0	6.5	1.3	1.5	1.1
FG-TDOF24	PIPE	24.0	6.5	1.8	2.0	1.5
FG-TDOA6	PANEL	6.0	4.5	0.4	0.2	0.2
FG-TDOA8	PANEL	8.0	4.5	0.7	0.2	0.3
FG-TDOA10	PANEL	10.0	4.5	0.8	0.3	0.5
FG-TDOA12	PANEL	12.0	4.5	1.0	0.4	0.6
FG-TDOA18	PANEL	18.0	4.5	1.4	0.8	1.1
FG-TDOA24	PANEL	24.0	4.5	1.8	1.1	1.5

* ALTERNATE ADAPTER CONFIGURATION. SEE DETAIL B.
**CAPACITY PER 5-FT. SEGMENT USED.

FloGard®
Catch Basin Insert Filter
Trench Drain Style
Inlet Filtration

Oldcastle® Stormwater Solutions
7921 Southpark Plaza, Suite 200 | Littleton, CO | 80120 | Ph: 800.579.8819 | oldcastlestormwater.com

THIS DOCUMENT IS THE PROPERTY OF OLDCASTLE PRECAST, INC. IT IS SUBMITTED FOR REFERENCE PURPOSES ONLY AND SHALL NOT BE USED IN ANY WAY INJURIOUS TO THE INTERESTS OF SAID COMPANY. COPYRIGHT © 2010 OLDCASTLE PRECAST, INC. ALL RIGHTS RESERVED.

DRAWING NO.	REV	ECO	DATE	
FG-LP-0002	H	ECO-0142 JPR 7/13/16	JPR 2/21/07	SHEET 2 OF 2

NOTES:
1. FILTERS SHALL BE INSTALLED AT ALL TRENCH DRAINS.
2. CONTRACTOR SHALL CONFER WITH FLOGARD SUPPLIER PRIOR TO CONSTRUCTION TO ENSURE CORRECT SIZING.

FLOGARD + PLUS TRENCH DRAIN FILTER INSERT

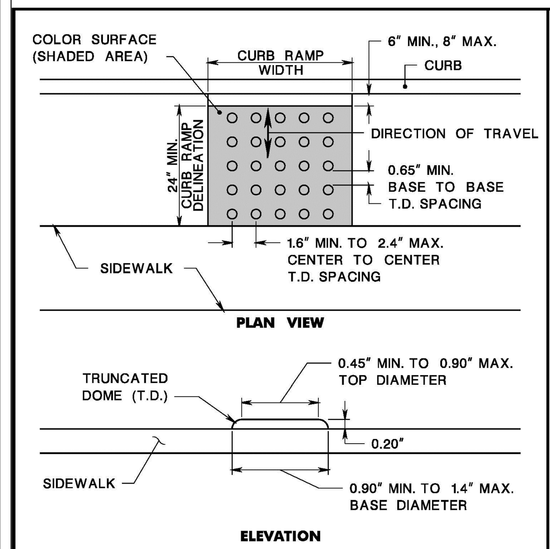

DETECTABLE WARNING SURFACE

CD-606-1.1

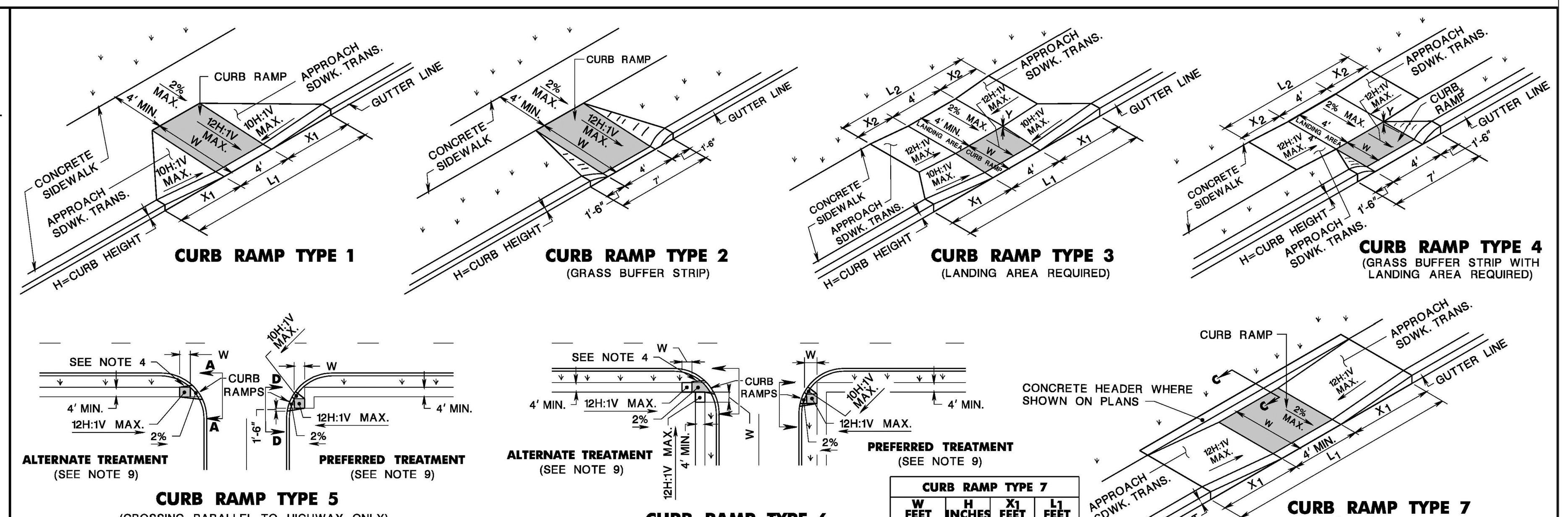

CURB RAMP TYPE 7			
W FEET	H INCHES	X1 FEET	L1 FEET
4 MIN. 6 MAX.	3	3	11
	4	4	13
	5	5	15
	6	6	17
	7	7	19
	8	8	21
	9	9	23

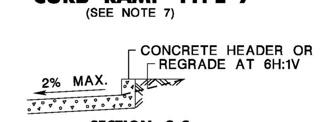

SECTION C-C

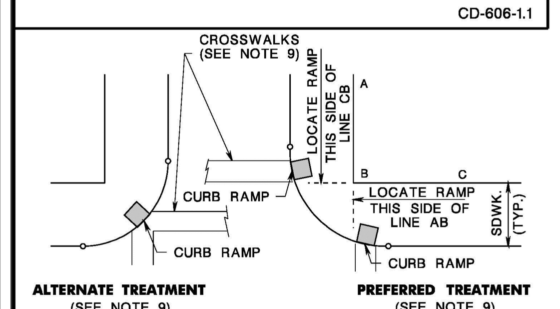

ALTERNATE TREATMENT (SEE NOTE 9)

PREFERRED TREATMENT (SEE NOTE 9)

CURB RAMP TYPE 1			
H INCHES	X1 FEET	L1 FEET	W FEET
3	2.5	9.0	3
4	3.3	10.6	4
5	4.2	12.4	5
6	5.0	14.0	6
7	5.8	15.6	7
8	6.7	17.4	8
9	7.5	19.0	9

CURB RAMP TYPE 2, 5 OR 6	
H INCHES	W FEET
3	3
4	4
5	5
6	6
7	7
8	8
9	9

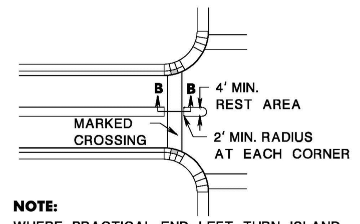

NOTE:
WHERE PRACTICAL, END LEFT TURN ISLAND OR DIVISIONAL ISLAND BEFORE CROSSWALK TO ELIMINATE CUT-THROUGH

ISLAND WALKWAY OPENING AT INTERSECTIONS

1. LANDING AREA, APPROACH SIDEWALK TRANSITIONS, AND CURB RAMP SHALL BE KEPT CLEAR OF OBSTRUCTIONS.
2. DIMENSIONS SHOWN IN TABLES ARE FOR RELATIVELY FLAT SIDEWALK AREAS. CARE SHOULD BE TAKEN WHEN DETERMINING CURB RAMP SIZE BASED ON CURB HEIGHT (H) WHERE ELEVATION OF CURB AND SIDEWALK VARY DRASTICALLY IN AREA OF PROPOSED CURB RAMP.
3. CURB (DROPPED CURB) GUTTERLINE TO BE FLUSH WITH ROADWAY PAVEMENT A MINIMUM OF 4 FEET AT ALL CURB RAMPS.
4. FOR CURB RAMP TYPES 5 AND 6, IF A GRASS BUFFER DOES NOT EXIST, SLOPE CURB TO EQUAL SLOPE OF ADJACENT CURB RAMP.
5. SIDEWALK AND CURB RAMP WITHIN AREA ENCLOSED BY HEAVY LINES TO BE PAID FOR AS CONCRETE SIDEWALK OF THE APPROPRIATE ADJACENT THICKNESS.
6. CURB AND HEADER WITHIN AREA ENCLOSED BY HEAVY LINES TO BE PAID FOR AS VERTICAL CURB OR SLOPING CURB OF THE APPROPRIATE ADJACENT SIZE AND KIND.
7. WHERE THE DISTANCE FROM THE GUTTER LINE TO THE OUTSIDE EDGE OF SIDEWALK IS 6 FEET OR LESS, CURB RAMP TYPE 7 SHOULD BE USED, INSTEAD OF CURB RAMP TYPE 1 THROUGH 4.
8. CROSSWALKS AND STOP LINES MAY BE MARKED OR UNMARKED, SEE PLANS.
9. PREFERRED AND ALTERNATE TREATMENTS SHOULD NOT BE INTERMIXED WITHIN THE SAME INTERSECTION.
10. DIMENSIONS SHOWN IN TABLES ARE FOR 3 INCH TO 9 INCH CURB HEIGHTS. WHERE THE CURB HEIGHTS ARE OTHER THAN WHAT IS PROVIDED IN THE TABLES, THE DIMENSIONS OF THE RAMPS WILL HAVE TO BE CALCULATED BASED ON CROSS SLOPES SHOWN.

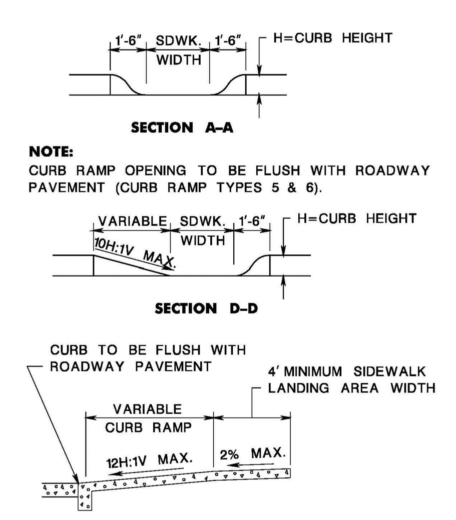

SECTION THROUGH CURB RAMPS 1 THROUGH 6

CURB RAMP TYPE 3						
W FEET	H INCHES	X1 FEET	L1 FEET	Y INCHES	X2 FEET	L2 FEET
2.5	3	2.5	9	2.5	0.5	5
	4	3.3	10.6	2.5	1.5	7
	5	4.2	12.4	2.5	2.5	9
	6	5.0	14.0	2.5	3.5	11
	7	5.8	15.6	2.5	4.5	13
	8	6.7	17.4	2.5	5.5	15
	9	7.5	19.0	2.5	6.5	17
3.0	3	*	*	*	*	*
	4	3.3	10.6	3.0	1	6
	5	4.2	12.4	3.0	2	8
	6	5.0	14.0	3.0	3	10
	7	5.8	15.6	3.0	4	12
	8	6.7	17.4	3.0	5	14
	9	7.5	19.0	3.0	6	16
3.5	3	*	*	*	*	*
	4	3.3	10.6	3.5	0.5	5
	5	4.2	12.4	3.5	1.5	7
	6	5.0	14.0	3.5	2.5	9
	7	5.8	15.6	3.5	3.5	11
	8	6.7	17.4	3.5	4.5	13
	9	7.5	19.0	3.5	5.5	15
4.0	3	*	*	*	*	*
	4	*	*	*	*	*
	5	4.2	12.4	4.0	1	6
	6	5.0	14.0	4.0	2	8
	7	5.8	15.6	4.0	3	10
	8	6.7	17.4	4.0	4	12
	9	7.5	19.0	4.0	5	14

CURB RAMP TYPE 4				
W FEET	H INCHES	Y INCHES	X2 FEET	L2 FEET
2.5	3	2.5	0.5	5
	4	2.5	1.5	7
	5	2.5	2.5	9
	6	2.5	3.5	11
	7	2.5	4.5	13
	8	2.5	5.5	15
	9	2.5	6.5	17
3.0	3	**	**	**
	4	3.0	1	6
	5	3.0	2	8
	6	3.0	3	10
	7	3.0	4	12
	8	3.0	5	14
	9	3.0	6	16
3.5	3	**	**	**
	4	3.5	0.5	5
	5	3.5	1.5	7
	6	3.5	2.5	9
	7	3.5	3.5	11
	8	3.5	4.5	13
	9	3.5	5.5	15
4.0	3	**	**	**
	4	**	**	**
	5	4.0	1	6
	6	4.0	2	8
	7	4.0	3	10
	8	4.0	4	12
	9	4.0	5	14

* TYPE 3 RAMP IS NOT APPLICABLE, USE TYPE 1. ** TYPE 4 RAMP IS NOT APPLICABLE, USE TYPE 2.

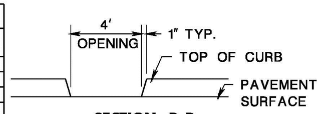

SECTION B-B

NOTE:
4' WIDE OPENING TO BE FLUSH WITH ROADWAY PAVEMENT

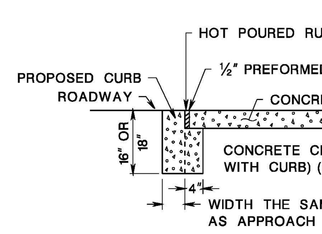

CURB RAMPS

CD-606-1.2

PUBLIC SIDEWALK CURB RAMP DETECTABLE WARNING SURFACE

N.T.S.

HMA = HOT MIX ASPHALT

CD-606-1

NEW JERSEY DEPARTMENT OF TRANSPORTATION

CONSTRUCTION DETAILS

51
146

ADA ACCESSIBLE RAMPS & DETECTABLE WARNING SURFACE

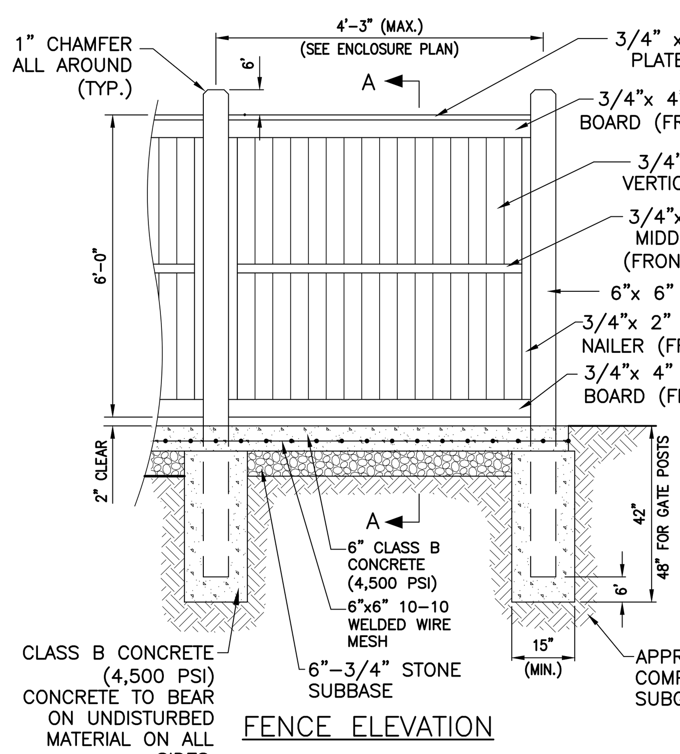

FENCE ELEVATION

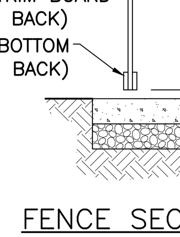

FENCE SECTION 'A-A'

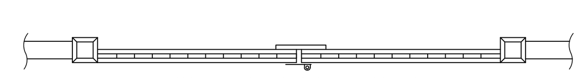

SWING GATE PLAN

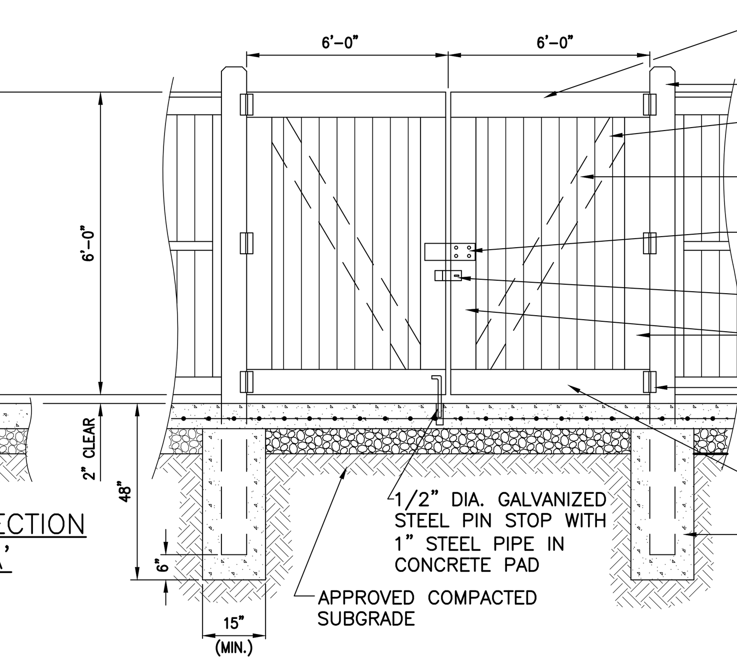

SWING GATE ELEVATION

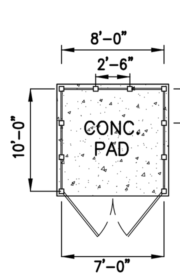

ENCLOSURE PLAN

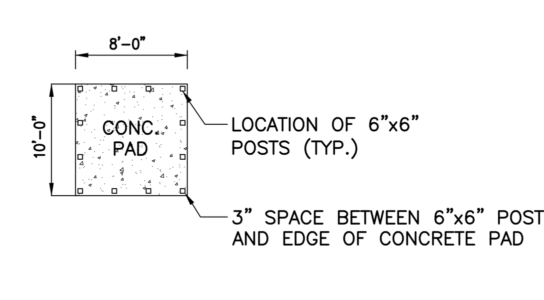

CONCRETE PAD PLAN

NOTES:
1. METAL FLANGES, CLEATS, BOLTS, SCREWS, ETC. SHALL BE STAINLESS STEEL OR GALVANIZED STEEL.
2. SEE SITE LAYOUT PLANS FOR LOCATION.

CONCRETE PAD & TRASH ENCLOSURE

L2A LAND DESIGN, LLC
60 GRAND AVENUE
ENGLEWOOD, NJ 07631
201.227.0300 • 201.227.0001 (Fax)
www.L2Alanddesign.com
New Jersey Certificate of Authorization No. 24GA28130900

10/1/2020
Michael E. Dipple, P.E. Date
New Jersey Professional Engineer #24GE04081200

WARNING: IF THIS PLAN DOES NOT CONTAIN A RAISED IMPRESSION SEAL OVER THE PROFESSIONAL SIGNATURE IT IS NOT AN AUTHORIZED OFFICIAL COPY.

APPLICANT:
PSI ATLANTIC USR NJ, LLC
530 OAK COURT DRIVE, SUITE 185
MEMPHIS, TN 38117
901.290.0184 (PHONE)

OWNER:
KRISUJEN REALTY, L.P.
A NEW JERSEY LIMITED PARTNERSHIP
7 INDUSTRIAL AVENUE
MAHWAH, NJ 07430
201.525.6292 (PHONE)

ARCHITECT:
PARKER STUDIOS
1300 MINT STREET, SUITE 110
CHARLOTTE, NC 28203
980.819.0416 (PHONE)

SURVEYOR:
LAKELAND SURVEYING, INC.
4 WEST MAIN STREET
ROCKAWAY, NJ 07866
973.625.5670 (PHONE)
973.625.4121 (FAX)

NO.	REVISION	DATE
1	REVISED PER COMPLETENESS REVIEW	5/1/2020
2	REVISED DRAINAGE PER NJDOT COMMENTS, DATED 7/21/2020	8/12/2020
3	REVISED PER PLANNING BOARD RESUBMISSION	10/1/2020

Previous Editions Obsolete

PROJECT LOCATION:
PROPOSED SELF-STORAGE FACILITY
100 N.J.S.H. ROUTE 17 NORTH
BOROUGH OF UPPER SADDLE RIVER,
BERGEN COUNTY, NJ

BLOCK: 1304; LOT: 7.01
TAX MAP: 13

DRAWING TITLE:
DETAILS - 4

SCALE:	REFER TO PLAN
DATE	1/17/2020
DESIGNED:	TEC
APPROVED:	MED
L2A PROJ. No.:	1901.161
DRAWING No.:	C-12

L2A LAND DESIGN, LLC - ALL RIGHTS RESERVED
THE COPY OR REUSE OF THIS DOCUMENT, OR PORTIONS THEREOF, FOR USE OTHER THAN THE PURPOSE ORIGINALLY INTENDED, WITHOUT THE WRITTEN PERMISSION OF L2A LAND DESIGN, LLC IS PROHIBITED.

	TYPE OF CHAMBER	TOP OF PAVEMENT	INVERT	CHAMBER HEIGHT	TOP OF CHAMBER	ESHWT [1]	HEIGHT ABOVE ESHWT	COMMENTS
NORTHERN (LOWER)	STORMTRAP	ELEV=291.00(MAX.) ELEV=288.50(MIN)	ELEV=283.50	3'-6"	ELEV=287.00	ELEV=280.50	3.00'	N/A
SOUTHERN (UPPER)			ELEV=284.23		ELEV=287.73	ELEV=283.00	1.00'	N/A

1. TEST PIT DATA BASED ON L2A LAND DESIGN, LLC FIELD OBSERVATIONS ON 3/21/16. THE OBSERVATIONS WERE REVIEWED IN THE FIELD BY A REPRESENTATIVE OF JOHNSON SOILS COMPANY. REFER TO L2A LAND DESIGN, LLC MEMORANDUM, DATED 3/22/16. REFER TO THE APPENDIX OF THE STORMWATER MANAGEMENT REPORT.

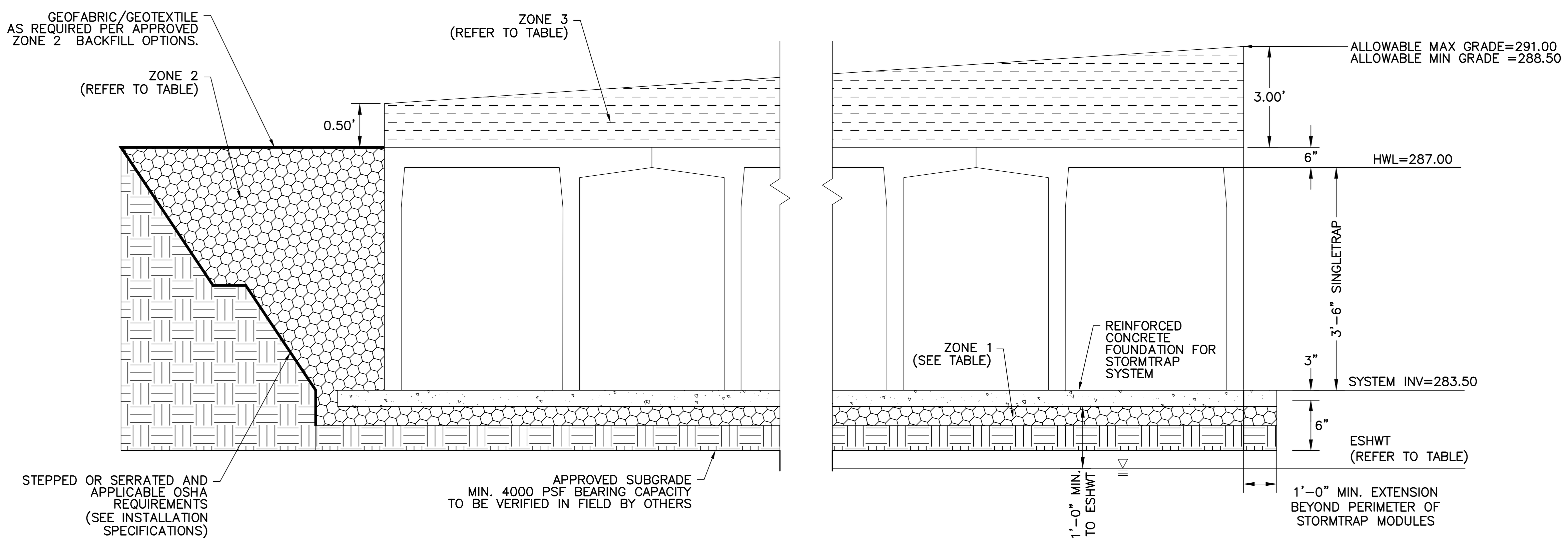

SECTION
(STORMTRAP SINGLETRAP 3'-6")

DESIGN CRITERIA:
ALLOWABLE MAX GRADE = 291.00
ALLOWABLE MIN GRADE = 288.5
SYSTEM INVERT = 283.50
STORMTRAP VOLUME = 17,326 CF

SITE SPECIFIC DESIGN CRITERIA:
1. STORMTRAP UNITS SHALL BE MANUFACTURED AND INSTALLED ACCORDING TO SHOP DRAWINGS APPROVED BY THE INSTALLING CONTRACTOR AND ENGINEER OF RECORD. THE SHOP DRAWINGS SHALL INDICATE SIZE AND LOCATION OF ROOF OPENINGS AND INLET/ OUTLET PIPE TYPES, SIZES, INVERT ELEVATIONS AND SIZE OF OPENINGS.
2. COVER RANGE: MIN.=0.50' & MAX.=3.00'; CONSULT STORMTRAP FOR ADDITIONAL COVER OPTIONS.
3. ALL DIMENSIONS AND SOIL CONDITIONS, INCLUDING BUT NOT LIMITED TO GROUNDWATER AND SOIL BEARING CAPACITY ARE REQUIRED TO BE VERIFIED IN THE FIELD BY OTHERS PRIOR TO STORMTRAP INSTALLATION.

NOTES:
1. FIGURE NOT TO SCALE.
2. DIMENSIONING OF STORMTRAP SYSTEM SHOWN BELOW ALLOW FOR A 3/4" GAP BETWEEN EACH MODULE.
3. ALL DIMENSIONS TO BE VERIFIED IN THE FIELD BY OTHERS.
4. REFER TO MANUFACTURER'S INSTALLATION SPECIFICATIONS.
5. SP – INDICATES A MODULE WITH MODIFICATIONS.
6. P – INDICATES A MODULE WITH A PANEL ATTACHMENT.

LOADING DISCLAIMER:
STORMTRAP IS NOT DESIGNED TO ACCEPT ANY ADDITIONAL LOADINGS FROM NEARBY STRUCTURES NEXT TO OR OVER THE TOP OF STORMTRAP. IF ADDITIONAL LOADING CONSIDERATIONS ARE REQUIRED FOR STRUCTURAL DESIGN OF STORMTRAP, PLEASE CONTACT STORMTRAP IMMEDIATELY.

SUBSURFACE DETENTION BASIN - 1 CROSS SECTION (STORMTRAP SINGLETRAP)

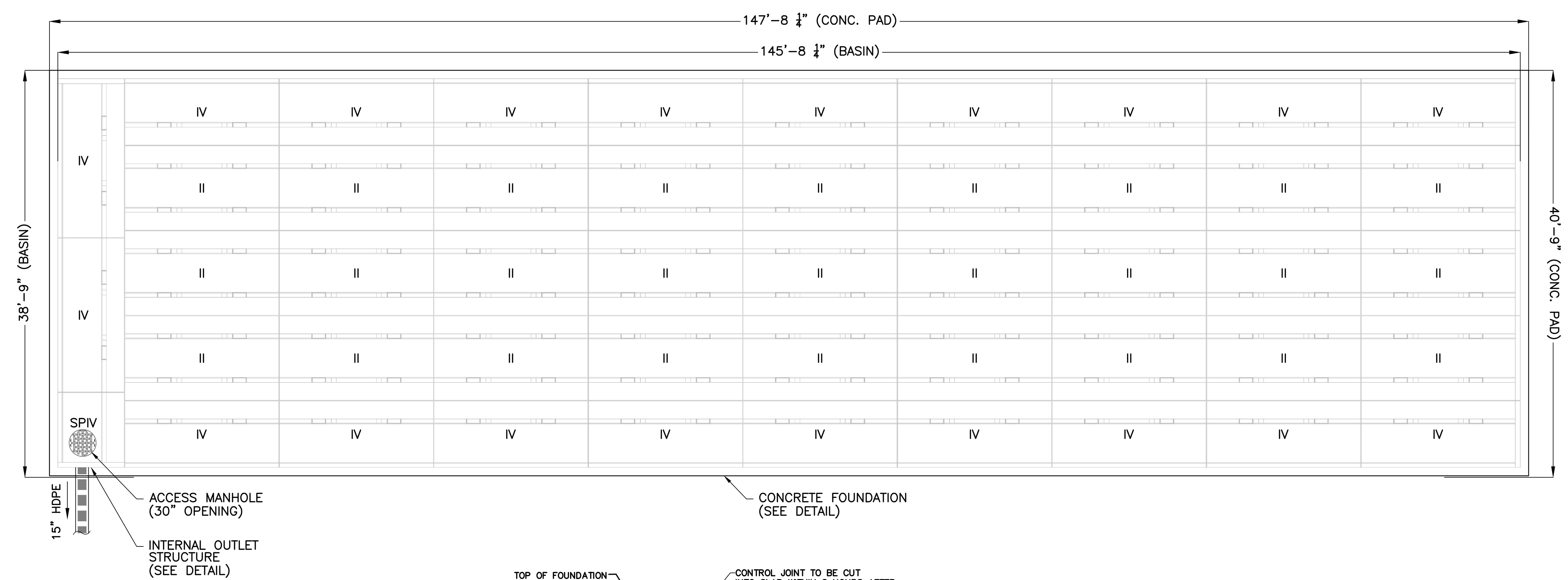

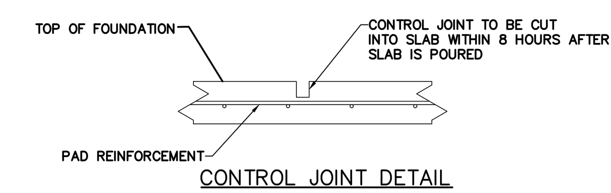

CONTROL JOINT DETAIL

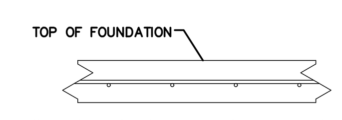

STORMTRAP FOUNDATION DETAIL

NOTES:
1. CONCRETE STRENGTH @ 28 DAYS, 5%–8% ENTRAINED AIR, 4" MAX. SLUMP.
2. NET ALLOWABLE SOIL PRESSURE AS INDICATED ON SHEET 1.0.
3. SOIL CONDITIONS TO BE VERIFIED ON SITE BY OTHERS.
4. REBAR: ASTM A–615 GRADE 60. BLACK BAR.
5. DIMENSION OF FOUNDATION MUST HAVE 1'–0" OVERHANG BEYOND EXTERNAL FACE OF MODULE.
6. DIMENSION OF STORMTRAP SYSTEM ALLOW FOR A 3/4" GAP BETWEEN EACH MODULE.
7. ALL DIMENSIONS TO BE VERIFIED IN THE FIELD BY OTHERS.
8. THE CONTROL JOINTS SHALL BE BETWEEN (IF REQUIRED BY ENGINEER OF RECORD) 16'–0" TO 24'–0" MAX APART.
9. SEE SHEET 3.0 FOR INSTALLATION SPECIFICATIONS.

MAXIMUM SYSTEM COVER	SLAB THICKNESS	CONCRETE STRENGTH	REINFORCEMENT (BOTH DIRECTIONS)	'A' CLEAR COVER
6" – 12"	0'–8"	4000 PSI	#4 @ 18" O.C.	3.5"
>1'–0" – 2'–0"	0'–8"	4000 PSI	#4 @ 16" O.C.	3.5"
>2'–0" – 3'–0"	0'–8"	4000 PSI	#4 @ 12" O.C.	3.5"
>3'–0" – 4'–0"	0'–8"	4000 PSI	#4 @ 12" O.C.	3.5"
>4'–0" – 5'–0"	0'–8"	4000 PSI	#5 @ 18" O.C.	3.375"
>5'–0" – 6'–0"	0'–8"	4000 PSI	#5 @ 16" O.C.	3.375"
>6'–0" – 7'–0"	0'–8"	4000 PSI	#5 @ 16" O.C.	3.375"
>7'–0" – 8'–0"	0'–9"	4000 PSI	#5 @ 12" O.C.	3.875"
>8'–0" – 9'–0"	0'–10"	4000 PSI	#5 @ 12" O.C.	4.375"
>9'–0" – 10'–0"	0'–10"	4500 PSI	#5 @ 12" O.C.	4.375"

SUBSURFACE DETENTION BASIN - 1 PLAN VIEW (STORMTRAP SINGLETRAP)

FILL DEPTH	TRACK WIDTH	MAX VEHICLE WEIGHT (KIPS)	MAX GROUND PRESSURE
12"	12"	51.8	1690 psf
	18"	56.1	1219 psf
	24"	68.1	1111 psf
	30"	76.7	1000 psf
	36"	85.0	924 psf

NOTE:
TRACK LENGTH NOT TO EXCEED 15'–4".
ONLY TWO TRACKS PER VEHICLE.

ZONE CHART

ZONES	ZONE DESCRIPTIONS	REMARKS
ZONE 1	FOUNDATION AGGREGATE	#5 (¾") STONE AGGREGATE (SEE NOTE 4 FOR DESCRIPTION)
ZONE 2	BACKFILL	UNIFIED SOILS CLASSIFICATION (GW, GP, SW, SP) OR SEE BELOW FOR APPROVED BACKFILL OPTIONS
ZONE 3	FINAL COVER OVERTOP	MATERIALS NOT TO EXCEED 120 PCF

APPROVED ZONE 2 BACKFILL OPTIONS

OPTION	REMARKS
¾" STONE AGGREGATE	THE STONE AGGREGATE SHALL CONSIST OF CLEAN AND FREE DRAINING ANGULAR MATERIAL. THE SIZE OF THIS MATERIAL SHALL HAVE 100% PASSING THE 1" SIEVE WITH 0% TO 5% PASSING THE #8 SIEVE. THIS MATERIAL SHALL BE SEPARATED FROM NATIVE MATERIAL USING GEOFABRIC AROUND THE PERIMETER OF THE BACKFILL (ASTM SIZE #57) AS DETERMINED BY THE GEOTECHNICAL ENGINEER.
SAND	IMPORTED PURE SAND IS PERMITTED TO BE USED AS BACKFILL IF IT IS CLEAN AND FREE DRAINING. THE SAND USED FOR BACKFILLING SHALL HAVE LESS THAN 40% PASSING #40 SIEVE AND LESS THAN 5% PASSING #200 SIEVE. THIS MATERIAL SHALL BE SEPARATED FROM NATIVE MATERIAL USING GEOFABRIC AROUND THE PERIMETER OF THE SAND BACKFILL.
CRUSHED CONCRETE AGGREGATE	CLEAN, FREE DRAINING CRUSHED CONCRETE AGGREGATE MATERIAL CAN BE USED AS BACKFILL FOR STORMTRAP'S MODULES. THE SIZE OF THIS MATERIAL SHALL HAVE 100% PASSING THE 1" SIEVE WITH 0% TO 5% PASSING THE #8 SIEVE. THIS MATERIAL SHALL BE SEPARATED FROM NATIVE MATERIAL USING GEOFABRIC AROUND THE PERIMETER OF THE BACKFILL.
ROAD PACK	STONE AGGREGATE 100% PASSING THE 1–1/2" SIEVE WITH LESS THAN 12% PASSING THE #200 SIEVE (ASTM SIZE #467). GEOFABRIC AS PER GEOTECHNICAL ENGINEER RECOMMENDATION.

STORMTRAP ZONE INSTALLATION SPECIFICATIONS/PROCEDURES
1. THE FILL PLACED AROUND THE STORMTRAP MODULES MUST DEPOSITED ON BOTH SIDES AT THE SAME TIME AND TO APPROXIMATELY THE SAME ELEVATION. AT NO TIME SHALL THE FILL BEHIND ONE SIDE WALL BE MORE THAN 2'-0" HIGHER THAN THE FILL ON THE OPPOSITE SIDE. BACKFILL SHALL EITHER BE COMPACTED AND/OR VIBRATED TO ENSURE THAT BACKFILL AGGREGATE/STONE MATERIAL IS WELL SEATED AND PROPERLY INTER LOCKED. CARE SHALL BE TAKEN TO PREVENT ANY WEDGING ACTION AGAINST THE STRUCTURE, AND ALL SLOPES WITHIN THE AREA TO BE BACKFILLED MUST BE STEPPED OR SERRATED TO PREVENT WEDGING ACTION. CARE SHALL ALSO BE TAKEN AS NOT TO DISRUPT THE JOINT WRAP FROM THE JOINT DURING THE BACKFILL PROCESS. BACKFILL MUST BE FREE-DRAINING MATERIAL. SEE ZONE 2 BACKFILL CHART ON THIS PAGE FOR APPROVED BACKFILL OPTIONS. IF NATIVE EARTH IS SUSCEPTIBLE TO MIGRATION, CONFIRM WITH GEOTECHNICAL ENGINEER AND PROVIDE PROTECTION AS REQUIRED (PROVIDED BY OTHERS).
2. DURING PLACEMENT OF MATERIAL OVERTOP THE SYSTEM, AT NO TIME SHALL MACHINERY BE USED OVERTOP THAT EXCEEDS THE DESIGN LIMITATIONS OF THE SYSTEM. WHEN PLACEMENT OF MATERIAL OVERTOP, MATERIAL SHALL BE PLACED SUCH THAT THE DIRECTION OF PLACEMENT IS PARALLEL WITH THE OVERALL LONGITUDINAL DIRECTION OF THE SYSTEM WHENEVER POSSIBLE.
3. THE FILL PLACED OVERTOP THE SYSTEM SHALL BE PLACED AT A MINIMUM OF 6" LIFTS. AT NO TIME SHALL MACHINERY OR VEHICLES GREATER THAN THE DESIGN HS-20 LOADING CRITERIA TRAVEL OVERTOP THE SYSTEM WITHOUT THE MINIMUM DESIGN COVERAGE. IF TRAVEL IS NECESSARY OVERTOP THE SYSTEM PRIOR TO ACHIEVING THE MINIMUM DESIGN COVER, IT MAY BE NECESSARY TO REDUCE THE ULTIMATE LOAD/BURDEN OF THE OPERATING MACHINERY SO AS TO NOT EXCEED THE DESIGN CAPACITY OF THE SYSTEM. IN SOME CASES, IN ORDER TO ACHIEVE REQUIRED COMPACTION, HAND COMPACTION MAY BE NECESSARY IN ORDER NOT TO EXCEED THE ALLOTTED DESIGN LOADING. SEE CHART FOR TRACKED VEHICLE WIDTH AND ALLOWABLE MAXIMUM PRESSURE PER TRACK.
4. STONE AGGREGATE FOUNDATION IN ZONE 1 IS RECOMMENDED FOR LEVELING PURPOSES ONLY (OPTIONAL).

STORMTRAP BACKFILLING NOTES

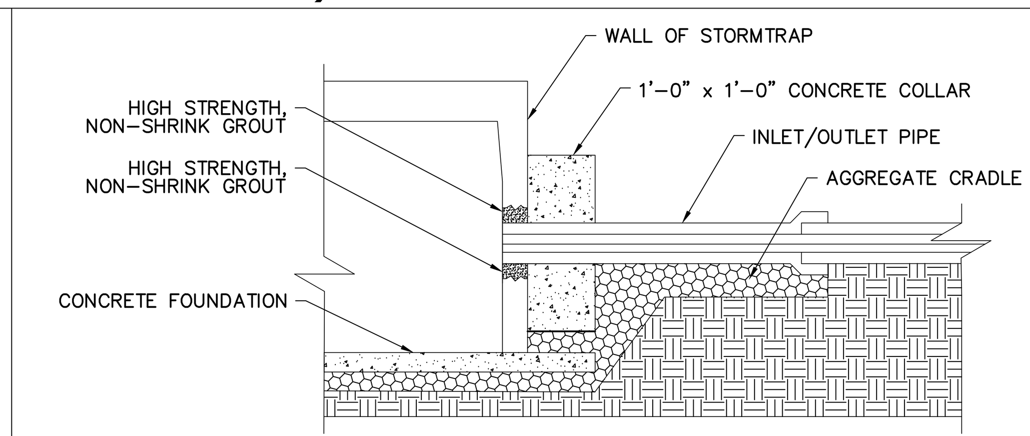

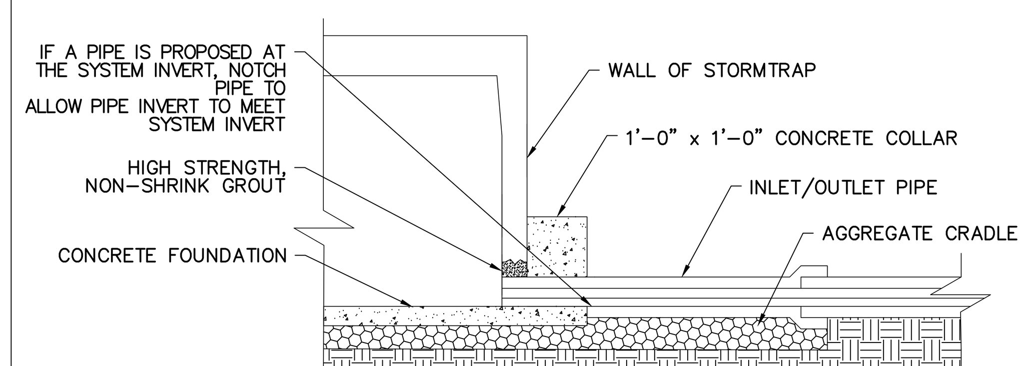

RECOMMENDED ACCESS OPENING SPECIFICATION

1. A TYPICAL ACCESS OPENING FOR THE STORMTRAP SYSTEM ARE 2'-0" IN DIAMETER. ACCESS OPENINGS LARGER THAN 3'-0" IN DIAMETER NEED TO BE APPROVED BY STORMTRAP. ALL OPENINGS MUST RETAIN AT LEAST 1'-0" OF CLEARANCE FROM THE END OF THE STORMTRAP MODULE UNLESS NOTED OTHERWISE. ALL ACCESS OPENINGS TO BE LOCATED ON INSIDE LEG UNLESS OTHERWISE SPECIFIED.
2. PLASTIC COATED STEEL STEPS PRODUCED BY M.A. INDUSTRIES PART #PS3-PFC OR APPROVED EQUAL (SEE STEP DETAIL) ARE PROVIDED INSIDE ANY MODULE WHERE DEEMED NECESSARY. THE HIGHEST STEP IN THE MODULE IS TO BE PLACED A DISTANCE OF 1'-0" FROM THE INSIDE EDGE OF THE STORMTRAP MODULES. ALL ENSUING STEPS SHALL BE PLACED AT A DISTANCE BETWEEN 10" MIN AND 14" MAX BETWEEN THEM. STEPS MAY BE MOVED OR ALTERED TO AVOID OPENINGS OR OTHER IRREGULARITIES IN THE MODULE.
3. STORMTRAP LIFTING INSERTS MAY BE RELOCATED TO AVOID INTERFERENCE WITH ACCESS OPENINGS OR THE CENTER OF GRAVITY OF THE MODULE AS NEEDED.
4. STORMTRAP ACCESS OPENINGS MAY BE RELOCATED TO AVOID INTERFERENCE WITH INLET AND/OR OUTLET PIPE OPENINGS SO PLACEMENT OF STEPS IS ATTAINABLE.
5. ACCESS OPENINGS SHOULD BE LOCATED IN ORDER TO MEET THE APPROPRIATE MUNICIPAL REQUIREMENTS. STORMTRAP RECOMMENDS AT LEAST TWO ACCESS OPENINGS PER SYSTEM FOR ACCESS AND INSPECTION.
6. USE PRECAST ADJUSTING RINGS AS NEEDED TO MEET GRADE. STORMTRAP RECOMMENDS FOR COVER OVER 2' TO USE PRECAST BARREL OR CONE SECTIONS. (PROVIDED BY OTHERS)

RECOMMENDED PIPE OPENING SPECIFICATION

1. MINIMUM EDGE DISTANCE FOR AN OPENING ON THE OUTSIDE WALL SHALL BE NO LESS THAN 1'-0".
2. MAXIMUM OPENING SIZE TO BE DETERMINED BY THE MODULE HEIGHT. PREFERRED OPENING SIZE Ø 36" OR LESS. ANY OPENING NEEDED THAT DOES NOT FIT THIS CRITERIA SHALL BE BROUGHT TO THE ATTENTION OF STORMTRAP FOR REVIEW.
3. CONNECTING PIPES SHALL BE INSTALLED WITH A 1'-0" CONCRETE COLLAR, AND AN AGGREGATE CRADLE FOR AT LEAST ONE PIPE LENGTH (SEE PIPE CONNECTION DETAIL). A STRUCTURAL GRADE CONCRETE OR HIGH STRENGTH, NON-SHRINK GROUT WITH A MINIMUM 28 DAY COMPRESSIVE STRENGTH OF 3000 PSI SHALL BE USED.
4. THE ANNULAR SPACE BETWEEN THE PIPE AND THE HOLE SHALL BE FILLED WITH HIGH STRENGTH NON-SHRINK GROUT.

RECOMMENDED PIPE INSTALLATION INSTRUCTIONS

1. CLEAN AND LIGHTLY LUBRICATE ALL OF THE PIPE TO BE INSERTED INTO STORMTRAP.
2. IF PIPE IS CUT, CARE SHOULD BE TAKEN TO ALLOW NO SHARP EDGES. BEVEL AND LUBRICATE LEAD END OF PIPE.
3. ALIGN CENTER OF PIPE TO CORRECT ELEVATION AND INSERT INTO OPENING.

NOTE: ALL ANCILLARY PRODUCTS/SPECIFICATIONS RECOMMENDED AND SHOWN ON THIS SHEET ARE RECOMMENDATIONS ONLY AND SUBJECT TO CHANGE PER THE INSTALLING CONTRACTOR AND/OR PER LOCAL MUNICIPAL CODE/REQUIREMENTS.

STORMTRAP PIPE CONNECTION DETAIL

1. STORMTRAP SHALL BE INSTALLED IN ACCORDANCE WITH ASTM C891 STANDARD PRACTICE FOR INSTALLATION OF UNDERGROUND PRE–CAST CONCRETE UTILITY STRUCTURES. THE FOLLOWING ADDITIONS AND/OR EXCEPTIONS SHALL APPLY:
2. IT IS THE RESPONSIBILITY OF THE INSTALLING CONTRACTOR TO ENSURE THAT PROPER/ADEQUATE EQUIPMENT IS USED TO SET/INSTALL THE MODULES.
3. THE AGGREGATE FOUNDATION HAS BEEN DESIGNED BASED ON THE FOLLOWING ASSUMPTIONS. THESE ASSUMPTIONS WILL NEED TO BE VERIFIED BY A GEOTECHNICAL ENGINEER WHICH WILL NEED TO BE EMPLOYED BY THE OWNER. REFER TO STORMTRAP'S BACKFILL DETAILS, SPECIFICATIONS & INSTALLATION PROCEDURES.
3.1. A QUALIFIED GEOTECHNICAL ENGINEER WILL BE EMPLOYED, BY OWNER, TO PROVIDE ASSISTANCE IN EVALUATING THE EXISTING SOIL CONDITIONS BELOW THE PROPOSED ENGINEERED STONE FOUNDATION. IF A STONE FOUNDATION DESIGN IS TO BE USED, THE BEARING PRESSURE OF THE SOILS BELOW THE STONE WILL NEED TO MEET OR EXCEED ALLOWABLE CAPACITY. IF THIS IS NOT POSSIBLE, THE STONE FOUNDATION MAY NOT BE AN OPTION FOR THIS LOCATION.
3.2. A QUALIFIED GEOTECHNICAL ENGINEER WILL BE EMPLOYED, BY OWNER, TO EVALUATE A SOURCE OF STONE AGGREGATES THAT WILL BE PLACED ON PROPERLY COMPACTED SOILS (SEE SHEET 1.0 FOR SOIL BEARING CAPACITY REQUIREMENTS). THE AGGREGATE BASE COURSE FOR WHICH THE STORMTRAP SYSTEM WILL BEAR DIRECTLY ON SHALL CONSIST OF A 3" THICK BED OF ¾" DIAMETER ANGULAR STONE, WELL COMPACTED AND SEATED, WITH NO FINES. AND A 15" THICK BED OF 3" DIAMETER STONE AGGREGATE (SEE SHEET 4.0 FOR FURTHER DESCRIPTION/EXPLANATION). PLEASE NOTE THAT THESE ARE ONLY MINIMUM RECOMMENDATIONS AND A QUALIFIED GEOTECHNICAL ENGINEER SHALL BE USED TO DETERMINE THE EXACT REQUIREMENTS FOR THE LOCATIONS THAT THE STORMTRAP SYSTEM IS TO BE LOCATED.
3.3. THE CONTRACTOR SHALL REMOVE ANY AND ALL EXPANDABLE OR COLLAPSIBLE SOILS AT THE DIRECTION OF A QUALIFIED GEOTECHNICAL ENGINEER.
3.4. THE AGGREGATE FOUNDATION SHALL BE INSTALLED SUCH THAT THE AGGREGATE EXTENDS A MINIMUM OF 2'–0" PAST THE OUTSIDE OF THE SYSTEM (SEE DETAIL 1).
3.5. THE ¾" AGGREGATE SHALL BE COMPACTED USING A VIBRATING ROLLER WITH ITS' FULL DYNAMIC FORCE APPLIED TO ACHIEVE A FLAT SURFACE.
3.6. DISK, DRY AND COMPACT THE TOP 8" OF THE SUBGRADE SOILS TO 95% OF THE STANDARD DRY DENSITY AND 110% OPTIMUM MOISTURE CONTENT.
3.7. AGGREGATE SHALL BE GRADED WITHIN +/– ¼" OF THE GRADE SHOWN ON THE PLANS.
3.8. MINIMUM SOIL BEARING CAPACITY LISTED ON SHEET 1.0 SHALL BE VERIFIED IN FIELD BY OTHERS.
4. THE STORMTRAP MODULES SHALL BE PLACED SUCH THAT THE MAXIMUM SPACE BETWEEN ADJACENT MODULES DOES NOT EXCEED ¾" (SEE DETAIL 2). IF THE SPACE EXCEEDS ¾", THE MODULES SHALL BE RESET WITH APPROPRIATE ADJUSTMENT MADE TO LINE AND GRADE TO BRING THE SPACE INTO SPECIFICATION.
5. STORMTRAP MODULES ARE NOT WATERTIGHT. IF A WATERTIGHT SOLUTION IS REQUIRED, CONTACT STORMTRAP FOR RECOMMENDATIONS. THE WATERTIGHT APPLICATION IS TO BE PROVIDED AND IMPLEMENTED BY THE CONTRACTOR. THE CONTRACTOR IS RESPONSIBLE TO ENSURE THAT THE SELECTED WATERTIGHT SOLUTION PERFORMS AS SPECIFIED BY THE MANUFACTURER.
6. ALL EXTERIOR JOINTS BETWEEN ADJACENT STORMTRAP MODULES SHALL BE SEALED WITH 8" WIDE PRE–FORMED, COLD–APPLIED, SELF–ADHERING ELASTOMERIC RESIN, BONDED TO A WOVEN , HIGHLY PUNCTURE RESISTANT POLYMER WRAP, CONFORMING TO ASTM C891 AND SHALL BE INTEGRATED WITH PRIMER SEALANT AS APPROVED BY STORMTRAP (SEE DETAILS 3 & 4). THE JOINT WRAP DOES NOT PROVIDE A WATERTIGHT SEAL. THE SOLE PURPOSE OF THE JOINT WRAP IS TO PROVIDE A SILT AND SOIL TIGHT SYSTEM. THE ADHESIVE EXTERIOR JOINT WRAP SHALL BE INSTALLED ACCORDING TO THE FOLLOWING INSTALLATION INSTRUCTIONS:
6.1. USE A BRUSH OR WET CLOTH TO THOROUGHLY CLEAN THE OUTSIDE SURFACE AT THE POINT WHERE THE JOINT WRAP IS TO BE APPLIED.
6.2. A RELEASE PAPER PROTECTS THE ADHESIVE SIDE OF THE JOINT WRAP. PLACE THE ADHESIVE TAPE (ADHESIVE SIDE DOWN) AROUND THE STRUCTURE, REMOVING THE RELEASE PAPER AS YOU GO. PRESS THE JOINT WRAP FIRMLY AGAINST THE STORMTRAP MODULE SURFACE WHEN APPLYING.
7. IF THE CONTRACTOR NEEDS TO CANCEL ANY SHIPMENTS, THEY MUST DO SO 48 HOURS PRIOR TO THEIR SCHEDULED ARRIVAL AT THE JOB SITE. IF CANCELED AFTER THAT TIME, PLEASE CONTACT THE PROJECT MANAGER.
8. IF THE STORMTRAP MODULE(S) IS DAMAGED IN ANY WAY PRIOR, DURING, OR AFTER INSTALL, STORMTRAP, MUST BE CONTACTED IMMEDIATELY TO ASSESS THE DAMAGE AND TO DETERMINE WHETHER OR NOT THE MODULE(S) WILL NEED TO BE REPLACED. IF ANY MODULE ARRIVES AT THE JOBSITE DAMAGED DO NOT UNLOAD IT; CONTACT STORMTRAP, IMMEDIATELY. ANY DAMAGE NOT REPORTED BEFORE THE TRUCK IS UNLOADED WILL BE THE CONTRACTOR'S RESPONSIBILITY.
9. STORMTRAP MODULES CANNOT BE ALTERED IN ANY WAY AFTER MANUFACTURING WITHOUT WRITTEN CONSENT FROM STORMTRAP.

STORMTRAP INSTALLATION SPECIFICATIONS

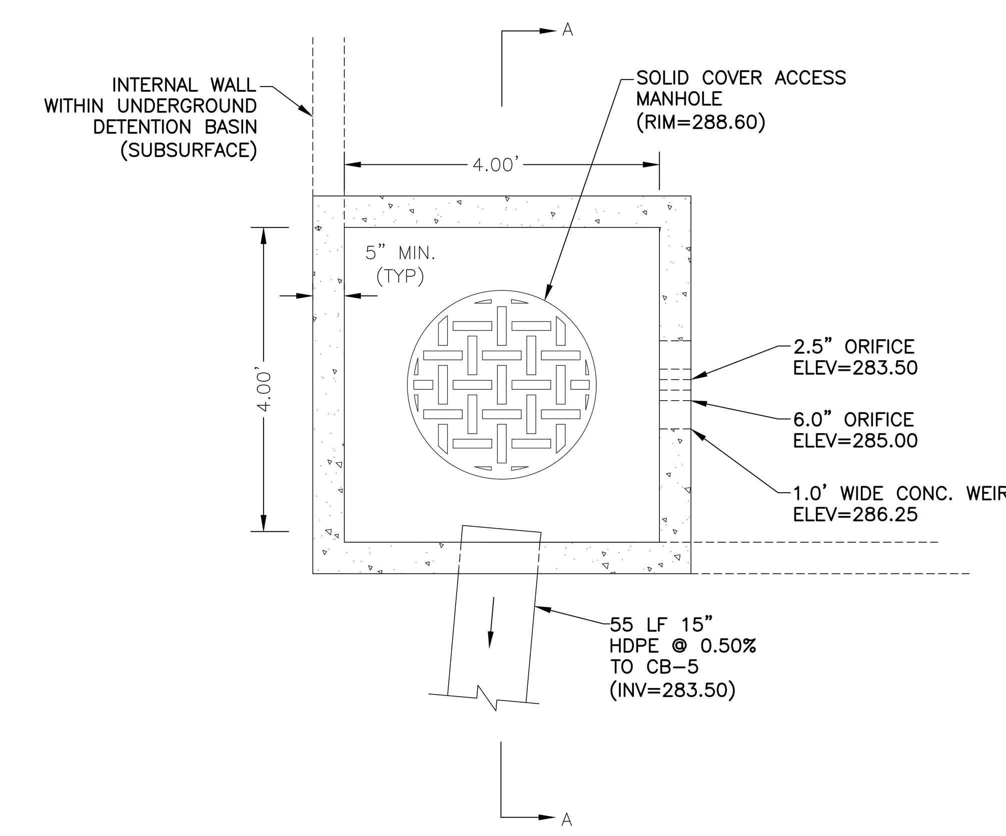

PLAN

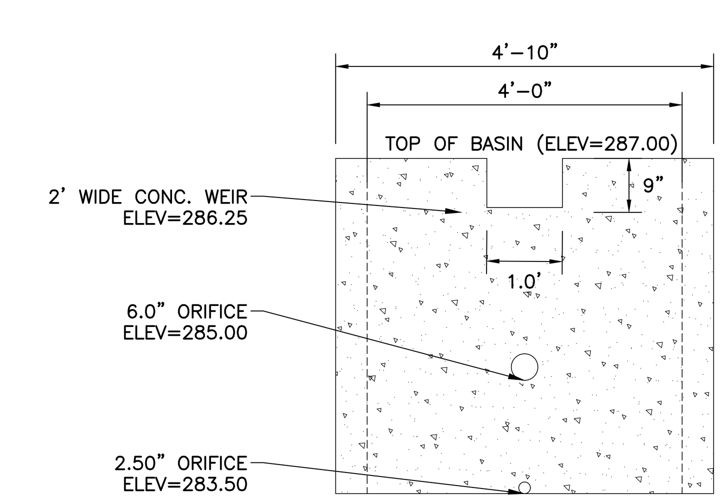

SECTION A–A

(FIGURES NOT TO SCALE)

INTERNAL OUTLET STRUCTURE (OCS-1)

L2A LAND DESIGN LLC
60 GRAND AVENUE
ENGLEWOOD. NJ 07631
201.227.0300 • 201.227.0001 (Fax)
www.L2Alanddesign.com
New Jersey Certificate of Authorization No. 24GA28130900

10/1/2020
Michael E. Dipple, P.E. Date
New Jersey Professional Engineer #24GE04081200

WARNING: IF THIS PLAN DOES NOT CONTAIN A RAISED IMPRESSION SEAL OVER THE PROFESSIONAL SIGNATURE IT IS NOT AN AUTHORIZED OFFICIAL COPY.

APPLICANT:
PSI ATLANTIC USR NJ, LLC
530 OAK COURT DRIVE, SUITE 185
MEMPHIS, TN 38117
901.290.0184 (PHONE)

OWNER:
KRISUJEN REALTY, L.P.
A NEW JERSEY LIMITED PARTNERSHIP
7 INDUSTRIAL AVENUE
MAHWAH, NJ 07430
201.525.6292 (PHONE)

ARCHITECT:
PARKER STUDIOS
1300 MINT STREET, SUITE 110
CHARLOTTE, NC 28203
980.819.0416 (PHONE)

SURVEYOR:
LAKELAND SURVEYING, INC.
4 WEST MAIN STREET
ROCKAWAY, NJ 07866
973.625.5670 (PHONE)
973.625.4121 (FAX)

NO.	DATE	REVISION
1	5/1/2020	REVISED PER COMPLETENESS REVIEW
2	8/12/2020	REVISED DRANAGE PER NJDOT COMMENTS, DATED 7/21/2020
3	10/1/2020	REVISED PER PLANNING BOARD RESUBMISSION

Previous Editions Obsolete

PROJECT LOCATION:
PROPOSED SELF-STORAGE FACILITY
100 N.J.S.H. ROUTE 17 NORTH
BOROUGH OF UPPER SADDLE RIVER,
BERGEN COUNTY, NJ

BLOCK: 1304; LOT: 7.01
TAX MAP: 13

DRAWING TITLE:
DETAILS - 5

SCALE:	REFER TO PLAN
DATE:	1/17/2020
DESIGNED:	TEC
APPROVED:	MED
L2A PROJ. No.:	1901.161
DRAWING No.:	C-13

L2A LAND DESIGN, LLC – ALL RIGHTS RESERVED
THE COPY OR REUSE OF THIS DOCUMENT, OR PORTIONS THEREOF, FOR USE OTHER THAN THE PURPOSE ORIGINALLY INTENDED, WITHOUT THE WRITTEN PERMISSION OF L2A LAND DESIGN, LLC IS PROHIBITED.