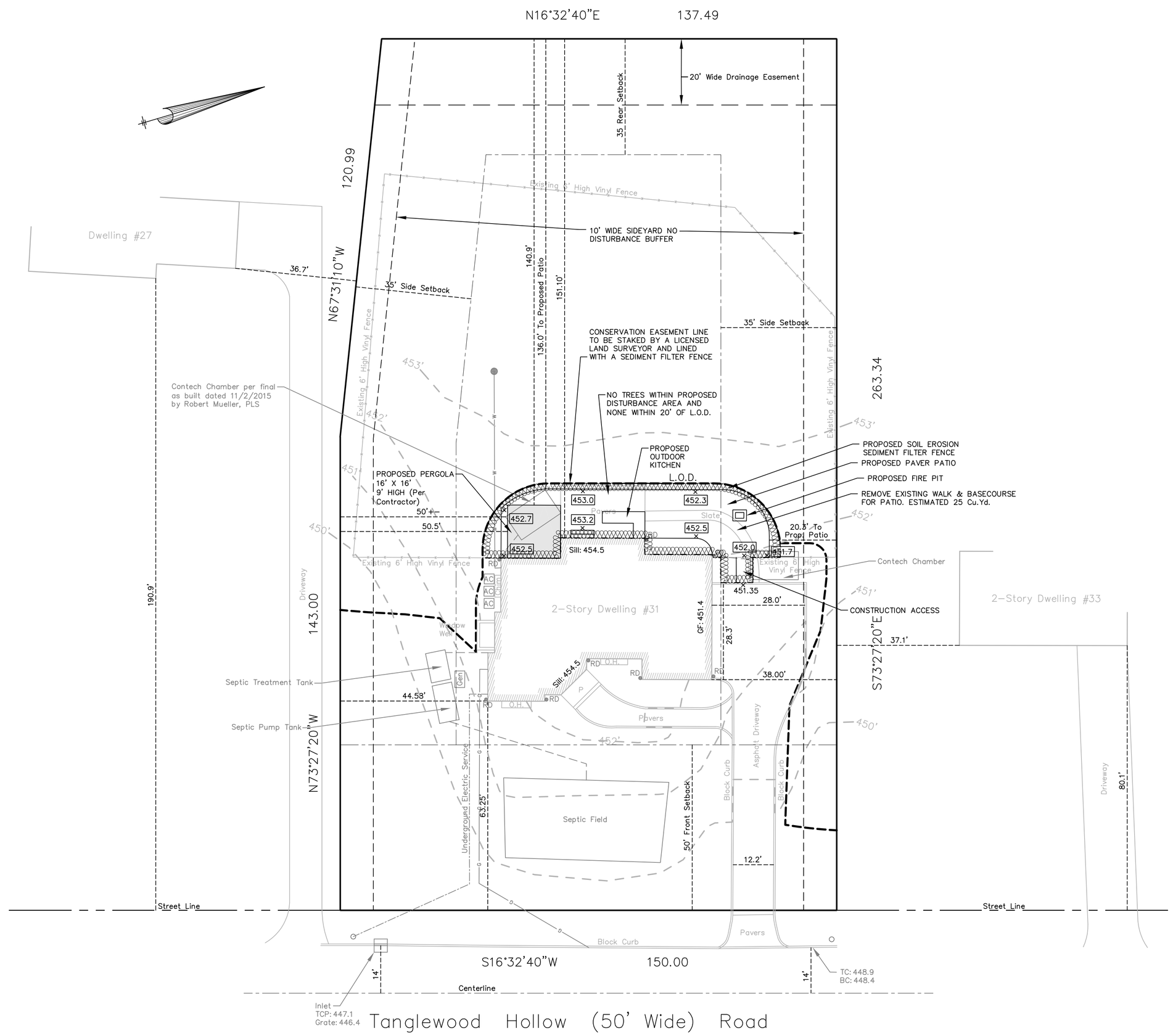

SITE PLAN

0' 10' 20' 30' 40' 50' 60'
Scale in Feet 1"=20'

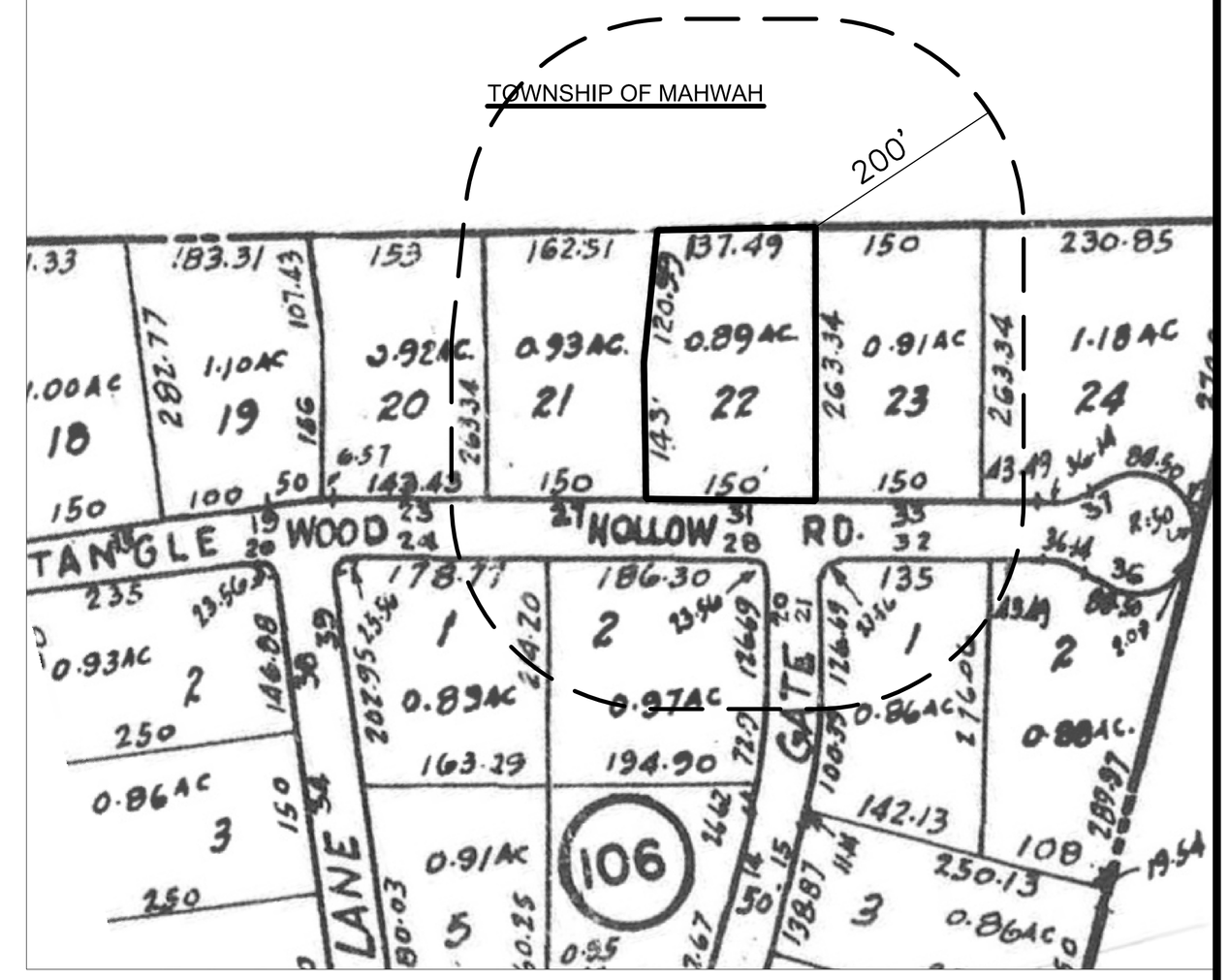

KEY MAP

0' 100' 200' 300'
Scale in Feet 1"100'

ADJACENT OWNERS
BLOCK 103
LOT 21 – Ralph W. and Madeline Soukis
23 – Gary and Marla Kaufman

LOT COVERAGE
Lot Area = 38,488 SF

Building Coverage = 2,609 SF
Steps & Walks = 418 SF
Driveway = 1,838 SF
Patio = 1,340 SF
AC Units & Window Wells = 75 SF
TOTAL LOT IMPERVIOUS COVERAGE = 6,280 SF OR 16.32%

R1 RESIDENTIAL DISTRICT SCHEDULE

	REQUIRED	EXISTING/PROPOSED
Lot Area	37,5000 SF	338,749 SF
Lot Frontage	150'	150.0'
Lot Depth	150'	263.34'
Front Yard	50'	63.25'
Side Yard	35'	38.0' – Dwelling 50.5' – Proposed Pergola 20.3' – Proposed Patio – VARIANCE REQUIRED
Rear Yard	35'	151.1' – Dwelling 140.9' – Proposed Pergola
Building Height	2 1/2 Story	2 Story

Notes:
- Elevations & property survey information per "Final As-Built Survey" dated 11-2-15 rev. 10-17-16 by Robert J. Mueller, PLS, for Anthony Volpe.
- Topography by standard stadia methods and locations may vary
- Topography outside of LOD may be approximate for general grading purposes only.
- Subsurface conditions are unknown
- All subsurface utility lines shown must be located and marked by the authority responsible for installation and/or maintenance with actual locations subject to excavation if necessary
- The location of existing utility lines per field evidence, records, mark outs, ect. and are subject to the above
- Trees to be removed – None
- All tree types per this engineering firm and are subject to a qualified Botonist if necessary
- See architect's plans for all dwelling dimensions and/or details as needed
- Property Survey information per "Final As-Built Survey" dated 11-2-15 rev. 10-17-16 by Robert J. Mueller, PLS, for Anthony Volpe.
- The LOD, Limit of Disturbance to be lined with a soil erosion sediment filter fence to remain in place until all disturbed areas have been stabilized.

NO WORK SHALL BE DONE ON THIS SITE UNTIL BELOW AGENCY IS NOTIFIED OF INTENTION TO GRADE OR EXCAVATE
Call Before You Dig
Call: TOLL FREE 1-800-272-1000
TWO WORKING DAYS BEFORE YOU DIG

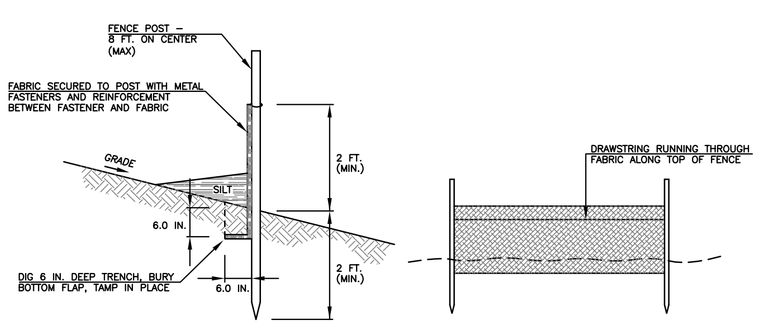

SILT FENCE DETAIL
N.T.S.

REQUIREMENTS FOR SILT FENCE:

1) FENCE POSTS SHALL BE SPACED 8 FEET CENTER TO CENTER OR CLOSER. THEY SHALL EXTEND AT LEATS 2 FEET INTO THE GROUND AND EXTEND AT LEAST 2 FEET ABOVE GROUND. POSTS SHALL BE CONSTRUCTED OF HARDWOOD WITH A MINIMUN DIAMETER OF 1½ INCHES.

2) A METAL FENCE WITH 6 INCH OR SMALLER OPENINGS AND AT LEAST 2 FEET HIGH MAY BE UTILIZED, FASTENED TO THE FENCE POSTS TO PROVIDE REINFORCEMENT AND SUPPORT TO THE GEOTEXTILE FABRIC WHERE SPACE FOR OTHER PRACTICES IS LIMITED AND HEAVY SEDIMENT LOADING IS EXPECTED.

3) A GEOTEXTILE FABRIC, RECOMMENDED FOR SUCH USE BY THE MANUFACTURER, SHALL BE BURIED AT LEAST 6 INCHES DEEP IN THE GROUND. THE FABRIC SHALL EXTEND AT LEAST 2 FEET ABOVE THE GROUND. THE FABRIC MUST BE SECURELY FASTENED TO THE POSTS USING A SYSTEM CONSISTING OF METAL FASTENERS (NAILS OR STAPLES) AND A HIGH STRENGTH REINFORCEMENT MATERIAL (NYLON WEBBING, GROMMETS, WASHERS, ETC.) PLACED BETWEEN THE FASTENER AND THE GEOTEXTILE FABRIC. THE FASTENING SYSTEM SHALL RESIST TEARING AWAY FROM THE POST. THE FABRIC SHALL INCORPORATE A DRAWSTRING IN THE TOP PORTION OF THE FENCE FOR ADDED STRENGTH.

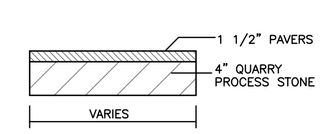

PAVER PATIO CROSS-SECTION
N.T.S.

UTILITY LEGEND
G–Gas Line / Main
W–Water Line / Main
S–Sewer Lateral
CO–Sanitary Clean Out
WV–Water Valve
GV–Gas Valve
RD–Roof Drain / Leader
RDSP–Roof Drain to Splash Pad

TREE LEGEND
A–Ash
B–Birch
M–Maple
O–Oak
RM–Red Maple
Tree size & type per this engineer and are subject to a qualified Botonist if required

2/10/2020	Per Twp. Engineering Letter
1/24/2020	Per Twp. Engineering Letter

Variance Site Plan For
CLARK
31 Tanglewood Hollow Road, Lot 22, Block 103
Situated in,
Borough of Upper Saddle River, Bergen County, New Jersey

PREPARED BY:
DARMSTATTER, INC.
PROFESSIONAL ENGINEERS • LAND SURVEYORS
P.O. BOX 4287
WAYNE, NJ 07470
TEL.: (973) 696-8077 EMAIL: DarmstatterInc@Gmail.com
C.O.A. No. 24GA28072900

WILLIAM J. DARMSTATTER
P.E. & L.S., NJ License No. 25796

DATE	December 16, 2019
SCALE	1" = 20'
FILE DWG. NO.	16149 - C
SHEET NO.	1 of 1

Copyright Protected.